SINAMICS G120

Power Module PM250

Hardware Installation Manual · 07/2009

SINAMICS

Answers for industry.

SIEMENS

SIEMENS

SINAMICS

SINAMICS G120
Power Module PM250

Hardware Installation Manual

Introduction 1

Safety notes 2

Installing/Mounting 3

Connecting 4

Service and maintenance 5

Technical specifications 6

Accessories 7

Appendix A

Edition 07/2009

07/2009
A5E01003502B AC

Legal information

Warning notice system

This manual contains notices you have to observe in order to ensure your personal safety, as well as to prevent damage to property. The notices referring to your personal safety are highlighted in the manual by a safety alert symbol, notices referring only to property damage have no safety alert symbol. These notices shown below are graded according to the degree of danger.

⚠DANGER
indicates that death or severe personal injury **will** result if proper precautions are not taken.

⚠WARNING
indicates that death or severe personal injury **may** result if proper precautions are not taken.

⚠CAUTION
with a safety alert symbol, indicates that minor personal injury can result if proper precautions are not taken.

CAUTION
without a safety alert symbol, indicates that property damage can result if proper precautions are not taken.

NOTICE
indicates that an unintended result or situation can occur if the corresponding information is not taken into account.

If more than one degree of danger is present, the warning notice representing the highest degree of danger will be used. A notice warning of injury to persons with a safety alert symbol may also include a warning relating to property damage.

Qualified Personnel

The device/system may only be set up and used in conjunction with this documentation. Commissioning and operation of a device/system may only be performed by **qualified personnel**. Within the context of the safety notes in this documentation qualified persons are defined as persons who are authorized to commission, ground and label devices, systems and circuits in accordance with established safety practices and standards.

Proper use of Siemens products

Note the following:

⚠WARNING
Siemens products may only be used for the applications described in the catalog and in the relevant technical documentation. If products and components from other manufacturers are used, these must be recommended or approved by Siemens. Proper transport, storage, installation, assembly, commissioning, operation and maintenance are required to ensure that the products operate safely and without any problems. The permissible ambient conditions must be adhered to. The information in the relevant documentation must be observed.

Trademarks

All names identified by ® are registered trademarks of the Siemens AG. The remaining trademarks in this publication may be trademarks whose use by third parties for their own purposes could violate the rights of the owner.

Disclaimer of Liability

We have reviewed the contents of this publication to ensure consistency with the hardware and software described. Since variance cannot be precluded entirely, we cannot guarantee full consistency. However, the information in this publication is reviewed regularly and any necessary corrections are included in subsequent editions.

Siemens AG
Industry Sector
Postfach 48 48
90026 NÜRNBERG
GERMANY

A5E01003502B AC
Ⓟ 07/2009

Copyright © Siemens AG 2006, 2007, 2008, 2009.
Technical data subject to change

Table of contents

1 Introduction 7
1.1 Power Modules PM250 8
1.2 Block diagram 9
1.3 Documents for the Inverter 10
2 Safety notes 11
3 Installing/Mounting 17
3.1 Installation conditions 17
3.2 Air cooling requirements 18
3.3 Dimensions and drill pattern 20
3.4 Control Unit installation 27
4 Connecting 29
4.1 Safety notes for the electrical installation 29
4.2 Power distribution systems 30
4.3 Operation with ungrounded (IT) supplies 31
4.4 Operation with Residual Current Devices (RCD) 31
4.5 Motor cable length and cross section 32
4.6 Access to power and motor terminals 34
4.7 Power and motor connections 35
4.8 ESD guidelines 37
5 Service and maintenance 39
5.1 Maintenance 39
5.2 Replacing the cooling fan 40
6 Technical specifications 43
7 Accessories 49
7.1 Reactor and filter 49
7.1.1 Line filter 52
7.1.2 Output reactor 55
7.1.3 Sine-wave filter 60
7.2 Brake Relay 65
7.3 Screen termination kit 68
A Appendix 69
A.1 Electromagnetic Compatibility 69
A.2 Definition of the EMC Environment and Categories 70
A.3 Standards 72
A.4 Abbreviations 73
Index 75

Introduction 1

The SINAMICS G120 range

The SINAMICS G120 inverter has been designed for the accurate and efficient control of the speed and torque for three-phase motors. The SINAMICS G120 system comprises two basic modules, the Control Unit (CU) and the Power Module (PM).

The Control Units are divided into the following:

- CU without fail-safe functions
  - CU230P-2 HVAC for pump and fan applications with Modbus RTU interface
  - CU230P-2 CAN for pump and fan applications with CANopen interface
  - CU230P-2 DP for pump and fan applications with PROFIBUS DP interface
  - CU240E economic version of the CU240 Control Units (e.g. less terminals, no encoder interface)
  - CU240S standard version of the CU240 Control Units
  - CU240S DP like CU240S plus PROFIBUS DP interface (PROFIdrive Profile V4.1)
  - CU240S PN like CU240S plus PROFINET interface (PROFIdrive Profile V4.1)
- CU with fail-safe functions
  - CU240S DP-F like CU240S DP plus integrated fail-safe functions
  - CU240S PN-F like CU240S PN plus integrated fail-safe functions

The Power Modules differ concerning the supply voltage and the way of realizing the motor braking function:

- PM240 Power Module with resistor braking and dc braking functions, supply voltage 3 AC 400 V
- PM250 Power Module with regenerative braking function, supply voltage 3 AC 400 V
- PM260 Power Module with regenerative braking function, supply voltage 3 AC 690 V

Control Units and Power Modules are allowed to be combined in any possible configuration.

Exceptions:

The CU230P-2 with firmware V4.2 can not be combined with PM240 FSGX or PM260. These combinations will be allowed with firmware V4.3.

See the respective manual for specific functions and features.

1.1 Power Modules PM250

Available Power Modules

There are the following types of Power Modules with regenerative braking capacity. The given power rating values are defined for "high overload" operation.

- Unfiltered Power Modules
  380V … 480 V, IP20, frame sizes D … F, 15 kW … 75 kW
- Power Modules with integrated Class A filter
  380V … 480 V, IP20, frame sizes C … F, 5.5 kW … 75 kW

1.2 Block diagram

Block diagram

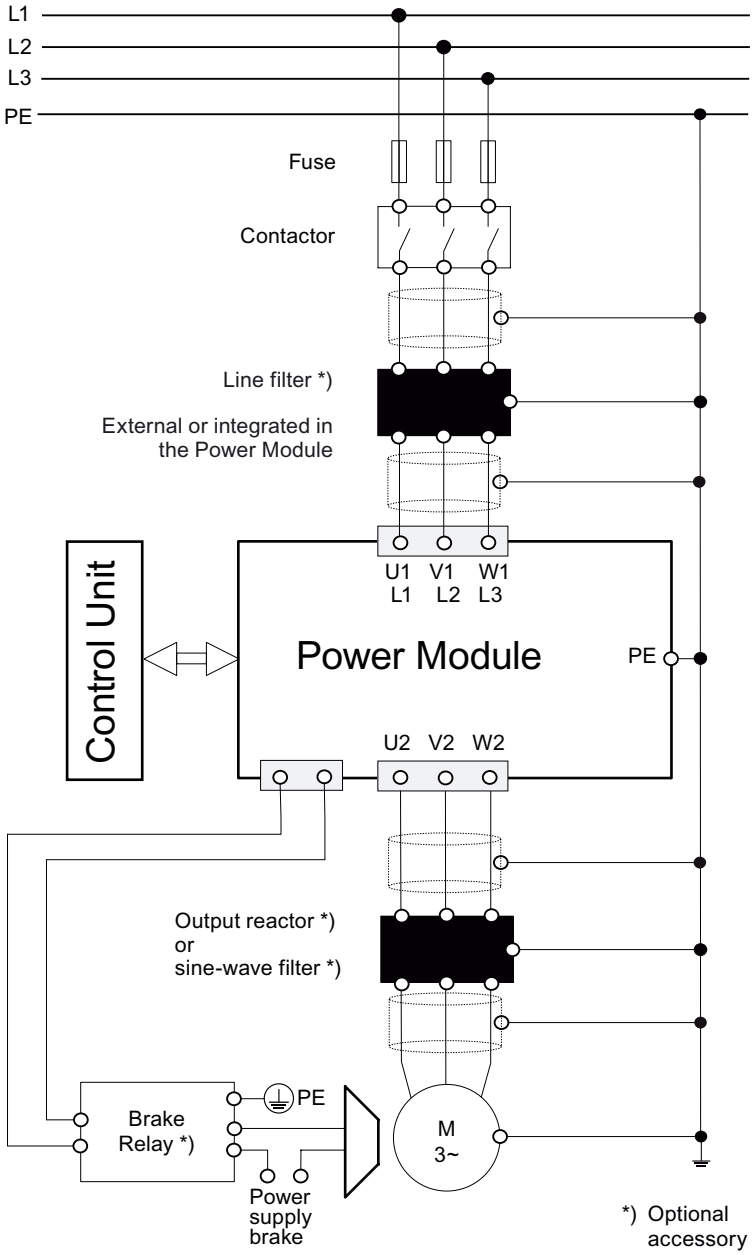

Figure 1-1 Power Module PM250

1.3 Documents for the Inverter

Available technical documentation

Comprehensive information and support tools are available from the Service and Support internet site

- http://support.automation.siemens.com

You find there the following types of documentation:

- Getting Started
- Operating Instructions
- Hardware Installation Manual
- Function Manual
- Parameter Manual
- Product Information

Further internet addresses

You can download the respective documents for your inverter under the following links:

- SINAMICS G110
  http://www.siemens.com/sinamics-g110
- SINAMICS G120
  http://www.siemens.com/sinamics-g120
- SINAMICS G120D
  http://www.siemens.com/sinamics-g120d
- SIMATIC ET 200S FC
  http://www.siemens.com/et200s-fc
- SIMATIC ET 200pro FC
  http://www.siemens.com/et200pro-fc

Application examples

You find various application examples to the inverters under the following link:

- http://support.automation.siemens.com/WW/view/en/20208582/136000

Safety notes

2

Safety Instructions

The following Warnings, Cautions and Notes are provided for your safety and as a means of preventing damage to the product or components in the connected machines. This section lists Warnings, Cautions and Notes, which apply generally when handling the inverter, classified as General, Transport and Storage, Commissioning, Operation, Repair and Dismantling and Disposal.

Specific Warnings, Cautions and Notes that apply to particular activities are listed at the beginning of the relevant sections in this manual and are repeated or supplemented at critical points throughout these sections.

Please read the information carefully, since it is provided for your personal safety and will also help prolong the service life of your inverter and the equipment to which it is connected.

Common Instructions

It has to be ensured by the machine manufacturer, that the line-side overcurrent protection equipment interrupts within 5 s (immovable equipment and modules in immovable equipment) in the case of minimum fault current (current on complete insulation failure to accessible conductive parts that are not live during operation and maximum current loop resistance).

It has to be ensured by the machine manufacturer, that the voltage drop between the beginning of the load system and the power drive system during operation with rated values does not exceed 4 %.

General

⚠ WARNING

This equipment contains dangerous voltages and controls potentially dangerous rotating mechanical parts. Non-compliance with the warnings or failure to follow the instructions contained in this manual can result in loss of life, severe personal injury or serious damage to property.

Protection in case of direct contact by means of SELV / PELV is only permissible in areas with equipotential bonding and in dry indoor rooms. If these conditions are not fulfilled, other protective measures against electric shock must be applied e.g. protective insulation.

Only suitably qualified personnel should work on this equipment, and only after becoming familiar with all safety notices, installation, operation and maintenance procedures contained in this manual. The successful and safe operation of this equipment is dependent upon its proper handling, installation, operation and maintenance.

As the earth leakage for this product can be greater than 3.5 mA a.c., a fixed earth connection is required and the minimum size of the protective earth conductor shall comply with the local safety regulations for high leakage current equipment.

The power supply, DC and motor terminals, the brake and thermistor cables can carry dangerous voltages even if the inverter is inoperative. Wait at least five minutes to allow the unit to discharge after switching off the line supply before carrying out any installation work.

It is strictly prohibited for any mains disconnection to be performed on the motor-side of the system; any disconnection of the mains must be performed on the mains-side of the Inverter.

When connecting the line supply to the Inverter, make sure that the terminal case of the motor is closed.

This equipment is capable of providing internal motor overload protection according to UL508C. Refer to P0610 and P0335, i^2t is ON by default.

When changing from the ON to OFF-state of an operation if an LED or other similar display is not lit or active; this does not indicate that the unit is switched-off or powered-down.

The inverter must always be grounded.

Isolate the line supply before making or changing connections to the unit.

Ensure that the inverter is configured for the correct supply voltage. The inverter must not be connected to a higher voltage supply.

Static discharges on surfaces or interfaces that are not generally accessible (e.g. terminal or connector pins) can cause malfunctions or defects. Therefore, when working with inverters or inverter components, ESD protective measures should be observed.

Take particular notice of the general and regional installation and safety regulations regarding work on dangerous voltage installations (e.g. EN 50178) as well as the relevant regulations regarding the correct use of tools and personal protective equipment (PPE).

⚠ CAUTION

Children and the general public must be prevented from accessing or approaching the equipment!

This equipment may only be used for the purpose specified by the manufacturer. Unauthorized modifications and the use of spare parts and accessories that are not sold or recommended by the manufacturer of the equipment can cause fires, electric shocks and injuries.

NOTICE

Keep this manual within easy reach of the equipment and make it available to all users.

Whenever measuring or testing has to be performed on live equipment, the regulations of Safety Code BGV A2 must be observed, in particular § 8 "Permissible Deviations when Working on Live Parts". Suitable electronic tools should be used.

Before installing and commissioning, please read these safety instructions and warnings carefully and all the warning labels attached to the equipment. Make sure that the warning labels are kept in a legible condition and replace missing or damaged labels.

Transport and storage

⚠ WARNING

Correct transport, storage as well as careful operation and maintenance are essential for the proper and safe operation of the equipment.

⚠ CAUTION

Protect the equipment against physical shocks and vibration during transport and storage. It is important that the equipment is protected from water (rainfall) and excessive temperatures.

Commissioning

⚠ WARNING

Working on the equipment by unqualified personnel or failure to comply with warnings can result in severe personal injury or serious damage to material. Only suitably qualified personnel trained in the setup, installation, commissioning and operation of the product should carry out work on the equipment.

⚠ CAUTION

Cable connection

The control cables must be laid separately from the power cables. Carry out the connections as shown in the installation section in this manual, to prevent inductive and capacitive interference from affecting the correct function of the system.

Mechanical Installation

⚠ WARNING

To ensure the safe operation of the equipment, it must be installed and commissioned by qualified personnel in full compliance with the warnings laid down in this manual.

Take particular note of the general and regional installation and safety regulations regarding work on dangerous voltage installation (e.g. EN 61800-5-1) as well as the relevant regulations regarding the correct use of tools and personal protective equipment (PPE).

⚠ WARNING

Power and motor connections

The inverter must be grounded from the supply side and the motor side. If it is not grounded correctly, extremely dangerous conditions may arise which could prove potentially fatal.

Isolate the mains electrical supply before making or changing connections to the unit.

Ensure that the appropriate circuit-breakers/fuses with the specified current rating are connected between the power supply and the inverter.

The terminals of the Inverter can carry dangerous voltages even if the inverter is inoperative. Wait at least 5 minutes to allow the unit to discharge after switching off the line supply before carrying out any installation work.

When connecting the line supply to the inverter, make sure that the terminal case of the motor is closed.

When changing from the ON to OFF-state of an operation if an LED or other similar display is not lit or active; this does not indicate that the unit is switched-off or powered-down.

Ensure that the inverter is configured for the correct supply voltage – it must not be connected to a higher voltage supply.

Operation

⚠ WARNING

The inverter operates at high voltages. When operating electrical devices, it is impossible to avoid applying hazardous voltages to certain parts of the equipment.

The power supply and motor terminals - and if available the DC terminals - can carry dangerous voltages even if the inverter is inoperative. Wait five minutes to allow the unit to discharge after switching off the line supply before carrying out any installation work.

Emergency Stop facilities according to EN 60204, IEC 204 (VDE 0113) must remain operative in all operating modes of the control equipment. Any disengagement of the Emergency Stop facility must not lead to an uncontrolled or an undefined restart of the equipment.

Wherever faults occurring in the control equipment can lead to substantial material damage or even grievous bodily injury (that is, potentially dangerous faults), additional external precautions must be taken or facilities provided to ensure or enforce safe operation, even when a fault occurs (e.g. independent limit switches, mechanical interlocks, etc.).

Certain parameter settings may cause the inverter to restart automatically after an input power failure, for example, the automatic restart function.

Motor parameters must be accurately configured for motor overload protection to operate correctly.

This equipment is suitable for use in a power system up to 10,000 symmetrical amperes (rms), for the maximum rated voltage + 10 % when protected by an appropriate standard fuse (refer to the catalogue for the type of fuse).

The Power Modules are components with a high leakage current!

Use of mobile radio device (e.g. telephones, walky-talkies) with a transmission power > 1 W in the immediate vicinity of the devices (< 1.5 m) can interfere with the functioning of the equipment!

⚠ CAUTION

The line filter conducts a high leakage current via the PE conductor. Due to the high leakage current a permanent PE connection for the line filter is required.

Furthermore, the following measures must be taken in accordance with EN 61800-5-1: Either protective ground conductor cross-sections ≥ 10 mm^2 (8 AWG) Cu or installation of a second protective ground conductor with both having the same cross-section as the line input cable.

Repair

⚠ WARNING
Repairs on equipment may only be carried out by Siemens Service, by repair centers authorized by Siemens or by authorized personnel who are thoroughly acquainted with all the warnings and operating procedures contained in this manual. Any defective parts or components must be replaced using parts contained in the relevant spare parts list. Disconnect the power supply before opening the equipment for access.

Dismantling and disposal

CAUTION
The packaging of the inverter is re-usable. Retain the packaging for future use. Easy-to-release screw and snap connectors allow you to break the unit down into its component parts. You can recycle these component parts, dispose of them in accordance with local requirements or return them to the manufacturer.

Installing/Mounting 3

⚠ WARNING
To ensure the safe operation of the equipment, it must be installed and commissioned by qualified personnel in full compliance with the warnings laid down in this manual. Take particular note of the general and regional installation and safety regulations regarding work on dangerous voltage installation (e.g. EN 61800-5-1) as well as the relevant regulations regarding the correct use of tools and personal protective equipment (PPE).

3.1 Installation conditions

General rules for the environmental protection of the Power Modules

To ensure that the power module is installed in the correct environmental conditions, please ensure that you adhere to the following guidelines:

- The Power Module is designed for IP20 protection. It is protected from the ingress of solid foreign objects ≥ 12.5 mm (≥ 0.49 inches).
- The Power Module is not protected against the ingress of water.
- The Power Module is designed to be installed in an electrical cabinet.
- Keep the Power Module free from dust and dirt.
- Keep the Power Module away from water, solvents and chemicals.
  Take care to site the inverter away from potential water hazards, for example, do not install the inverter beneath pipes that are subject to condensation. Avoid installing the inverter where excessive humidity and condensation may occur.
- Keep the Power Module within the maximum and minimum operating temperatures.
- Ensure that the correct level of ventilation and air flow is provided.
- Ensure that earthing and grounding practices for each Power Module and the cabinet follows the guidelines given in this document.

⚠ CAUTION
The Power Module MUST NOT be mounted horizontally.

3.2 Air cooling requirements

Installation and cooling

Make sure that there is an adequate airflow through the cubicle as follows:

1. Add the air flow values required for every Power Module (see following table) within the cubicle
2. Calculate the airflow required by components as reactor, filter, Control Unit and other electronic devices using the formula
   Air flow (l/s) = (Power loss (Watt) / ΔT) x 0.86
   (ΔT = Allowable temperature rise within the cubicle in °C).
   For the power losses of components see the following table
3. Add the airflow values of all components within the cubicle to get the complete air flow required
4. No equipment should be installed that could have a negative effect on the flow of cooling air
5. Make sure that the cooling vents in the Power Module are positioned correctly to allow the free movement of air
6. Avoid cooling air short circuit using air barriers, if necessary

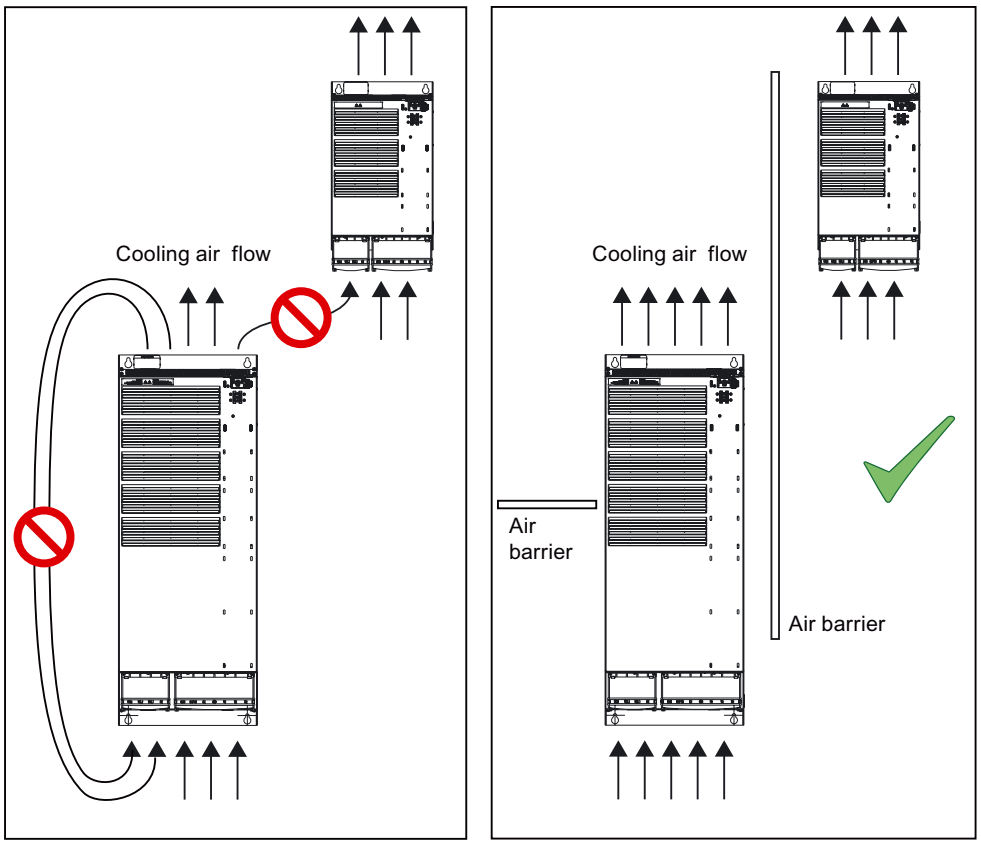

Figure 3-1 Air barriers for avoiding cooling air short circuits

7. Provide an adequate cubicle with sufficient air vent and suitable air strainer

Air cooling requirements

Table 3- 1 Air cooling requirements for operation with rated power (LO)

Frame size	HO power rating	Required cooling air flow	
C	5.5 kW ... 11 kW	38 l/s	80 CFM
D	18.5 kW ... 22 kW	22 l/s	47 CFM
	30 kW	39 l/s	83 CFM
E	30 kW	22 l/s	47 CFM
	37 kW	39 l/s	83 CFM
F	45 kW ... 55 kW	94 l/s	200 CFM
	75 kW	117 l/s	250 CFM

Table 3- 2 Power losses of Power Module components in Watt

	For Power Module			
Power losses of …	FSC	FSD	FSE	FSF
Power Module	240 … 400	440 … 720	1000 … 1300	1500 … 2400
Control Unit	<40			
Line filter class B	7.5 … 15	-		
Output reactor	60	200	200 … 270	500
Sine-wave filter	120 … 200	235 … 190	305	350 … 575

The power losses of the line filter are valid for the following operating conditions:

- Rated input current
- 50 Hz line frequency

The power losses of Power Module, output reactor and sine-wave filter are valid for the following operating conditions:

- Rated output current
- 50 Hz output frequency
- 4 kHz pulse frequency)

Further information is given in the technical data.

3.3 Dimensions and drill pattern

Dimensions, drill patterns and minimum distances

The dimension drawings for all frame sizes for the Power Module are shown in the figures and not true to scale.

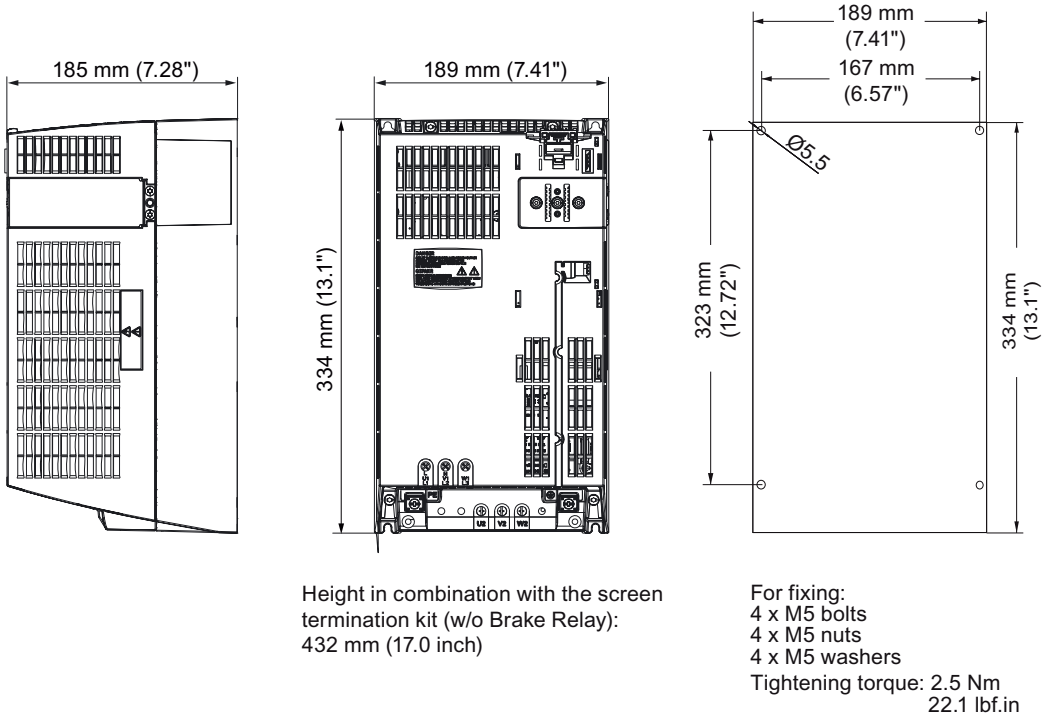

Figure 3-2 Dimensions and drill pattern, FSC (HO 5.5 kW ... 11 kW)

Table 3- 3 Minimum distances for mounting

Minimum distances FSC		Note
side by side	50 mm 1.96 inches	At max. environmental temperature of 40° C (104° F) and with max. HO load the Power Modules can be mounted adjacent to each other
above	125 mm 4.92 inches	
below	125 mm 4.92 inches	
front	40 mm 1.57 inches	Additional distance to the front with Control Unit CU240E
	65 mm 2.56 inches	Additional distance to the front with Control Units CU240S … and CU230P-2 …

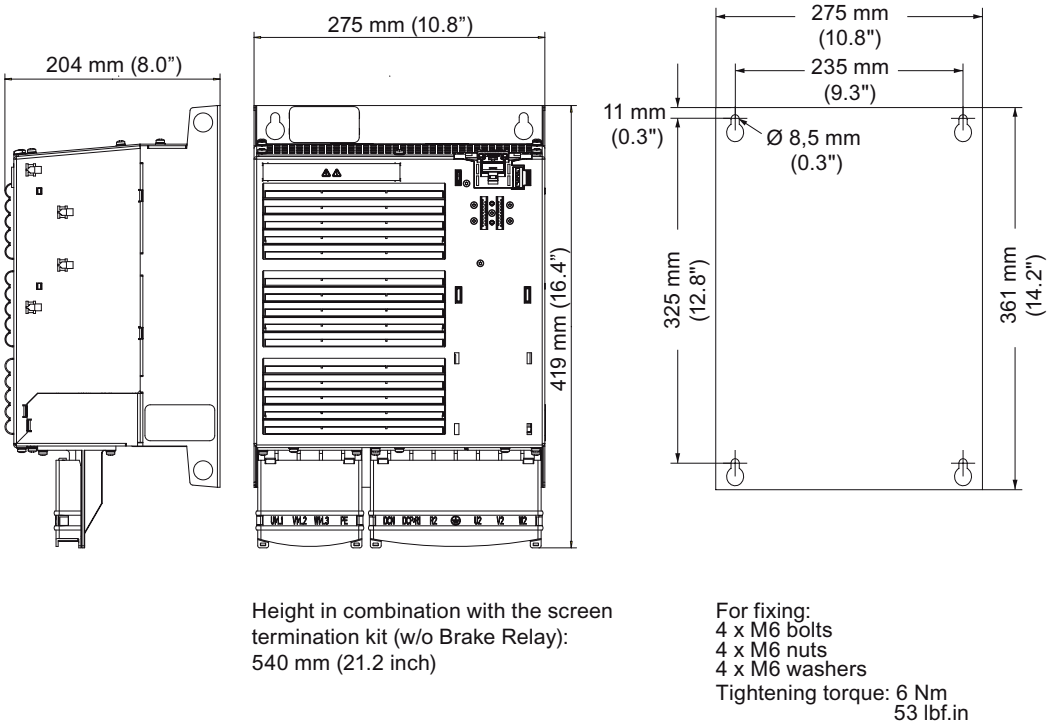

Figure 3-3 Dimensions and drill pattern, FSD unfiltered (HO 15 kW ... 22 kW)

Table 3- 4 Minimum distances for mounting

Minimum distances FSD		Note
side by side	0 mm 0 inches	
above	300 mm 11.81 inches	
below	300 mm 11.81 inches	
front	40 mm 1.57 inches	Additional distance to the front with Control Unit CU240E
	65 mm 2.56 inches	Additional distance to the front with Control Units CU240S … and CU230P-2 …

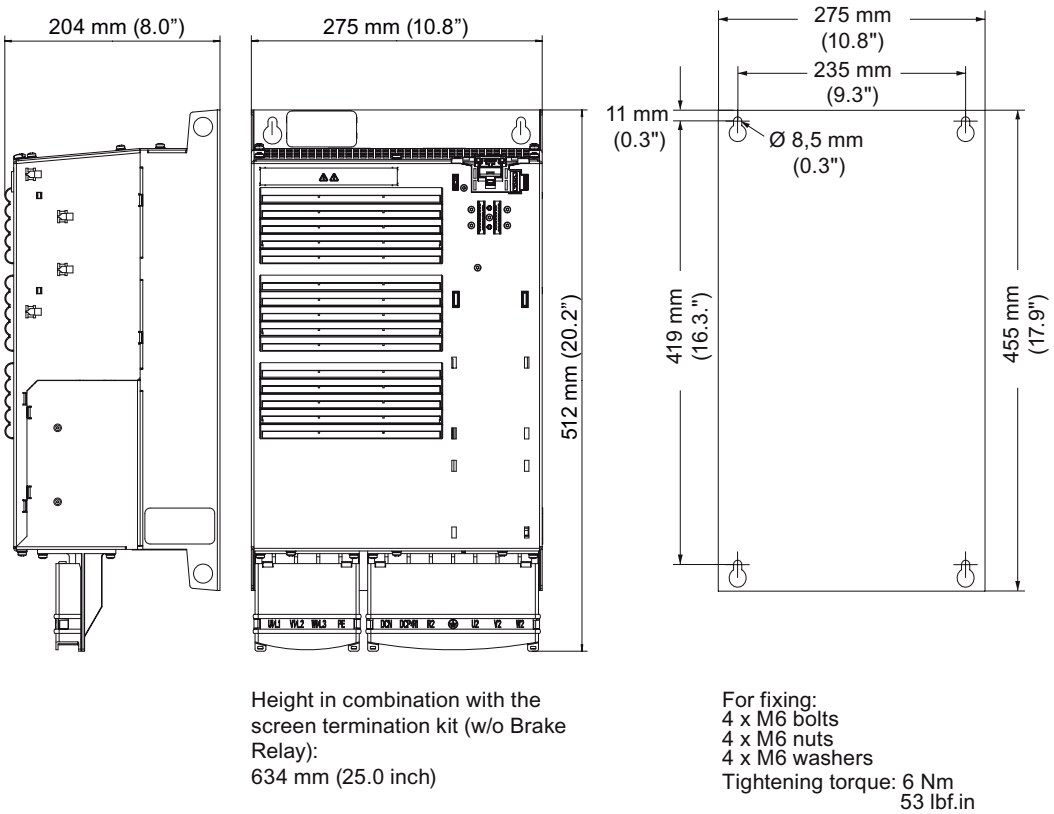

Figure 3-4 Dimensions and drill pattern, FSD filtered (HO 15 kW ... 22 kW)

Table 3- 5 Minimum distances for mounting

Minimum distances FSD		Note
side by side	0 mm 0 inches	
above	300 mm 11.81 inches	
below	300 mm 11.81 inches	
front	40 mm 1.57 inches	Additional distance to the front with Control Unit CU240E
	65 mm 2.56 inches	Additional distance to the front with Control Units CU240S … and CU230P-2 …

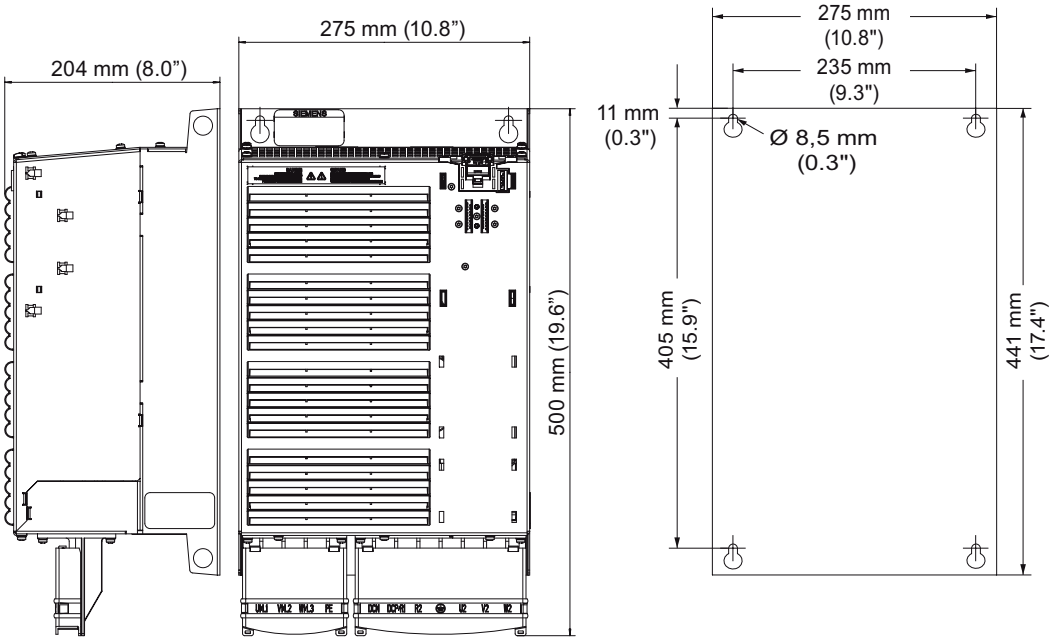

Height in combination with the screen termination kit (w/o Brake Relay):
622 mm (24.4 inch)

For fixing:
4 x M6 bolts
4 x M6 nuts
4 x M6 washers
Tightening torque: 6 Nm
53 lbf.in

Figure 3-5 Dimensions and drill pattern, FSE unfiltered (HO 30 kW ... 37 kW)

Table 3- 6 Minimum distances for mounting

Minimum distances FSE		Note
side by side	0 mm 0 inches	
above	300 mm 11.81 inches	
below	300 mm 11.81 inches	
front	40 mm 1.57 inches	Additional distance to the front with Control Unit CU240E
	65 mm 2.56 inches	Additional distance to the front with Control Unit CU240S … and CU230P-2 …

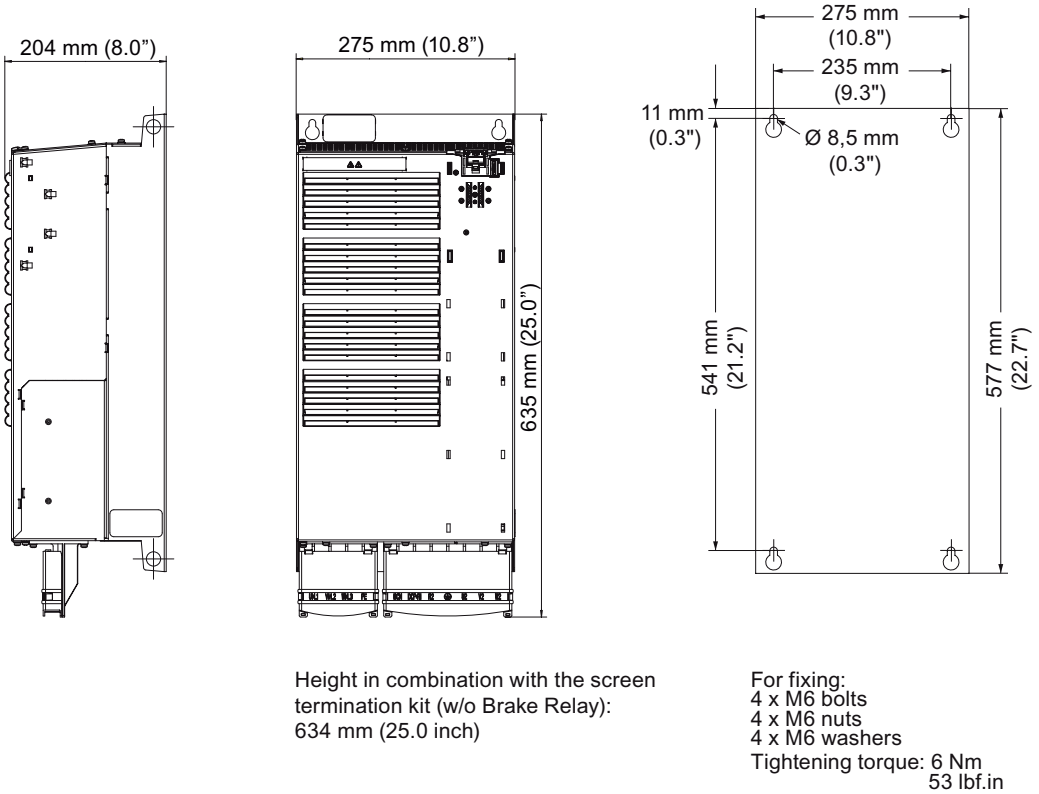

Figure 3-6 Dimensions and drill pattern, FSE filtered (HO 30 kW ... 37 kW)

Table 3- 7 Minimum distances for mounting

Minimum distances FSE		Note
side by side	0 mm 0 inches	
above	300 mm 11.81 inches	
below	300 mm 11.81 inches	
front	40 mm 1.57 inches	Additional distance to the front with Control Unit CU240E
	65 mm 2.56 inches	Additional distance to the front with Control Unit CU240S … and CU230P-2 …

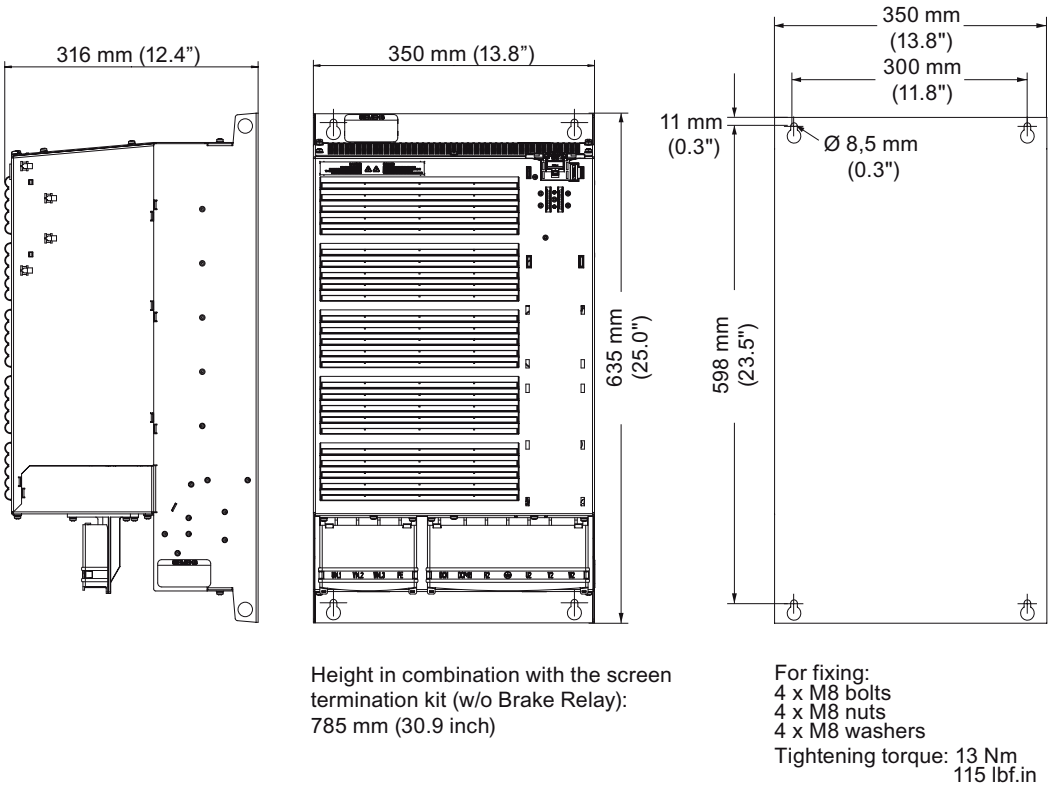

Figure 3-7 Dimensions and drill pattern, FSF unfiltered (HO 45 kW ... 75 kW)

Table 3- 8 Minimum distances for mounting

Minimum distances FSF		Note
side by side	0 mm 0 inches	
above	350 mm 13.77 inches	
below	350 mm 13.77 inches	
front	40 mm 1.57 inches	Additional distance to the front with control unit CU240E
	65 mm 2.56 inches	Additional distance to the front with control unit CU240S … and CU230P-2 …

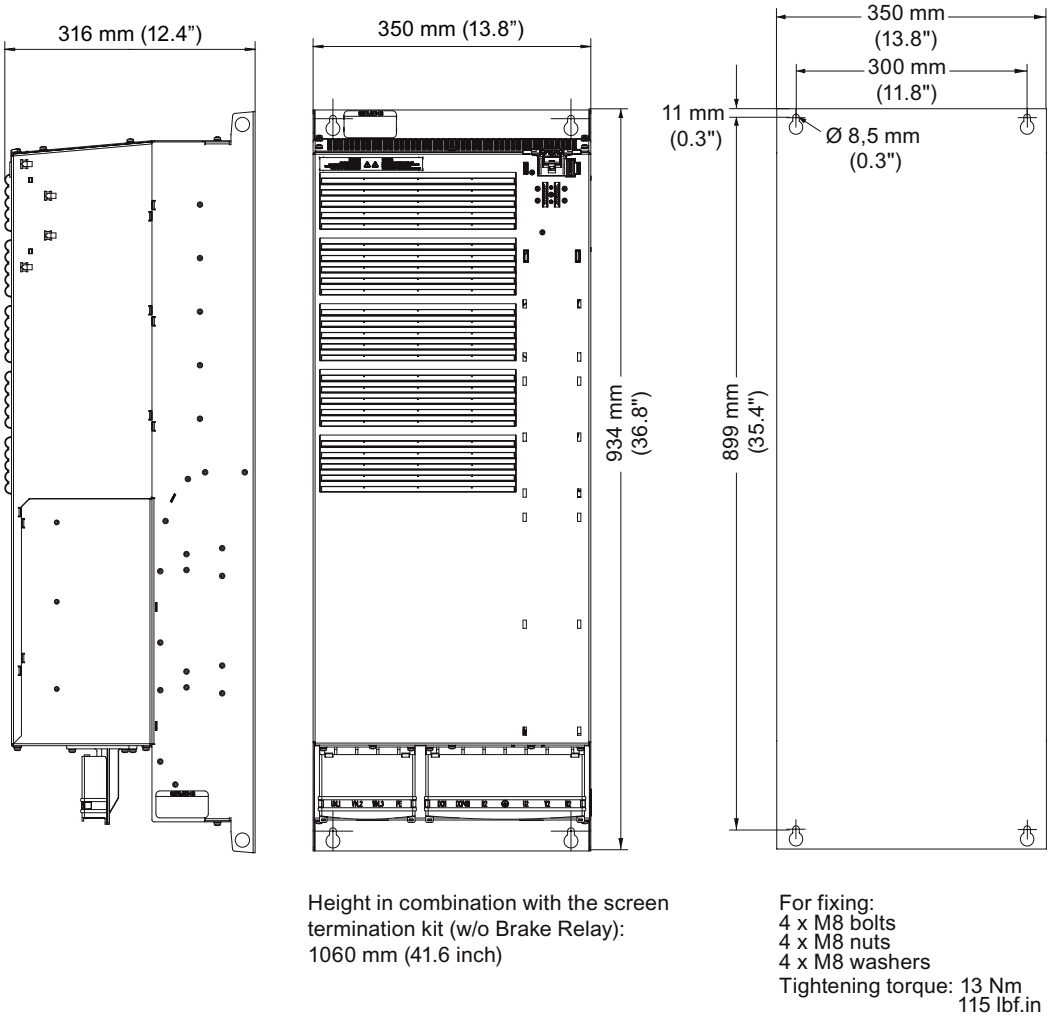

Figure 3-8 Dimensions and drill pattern, FSF filtered (HO 45 kW ... 75 kW)

Table 3- 9 Minimum distances for mounting

Minimum distances FSF		Note
side by side	0 mm 0 inches	
above	350 mm 13.77 inches	
below	350 mm 13.77 inches	
front	40 mm 1.57 inches	Additional distance to the front with control unit CU240E
	65 mm 2.56 inches	Additional distance to the front with control unit CU240S … and CU230P-2 …

3.4 Control Unit installation

Fitting the CU to the PM

The Control Unit is snapped onto the Power Module as shown in the figure below. To disconnect the CU push the release button on top of the PM.

The process of fitting the Control Unit to the Power Module is the same technique independent from the type of Control Unit or Power Module.

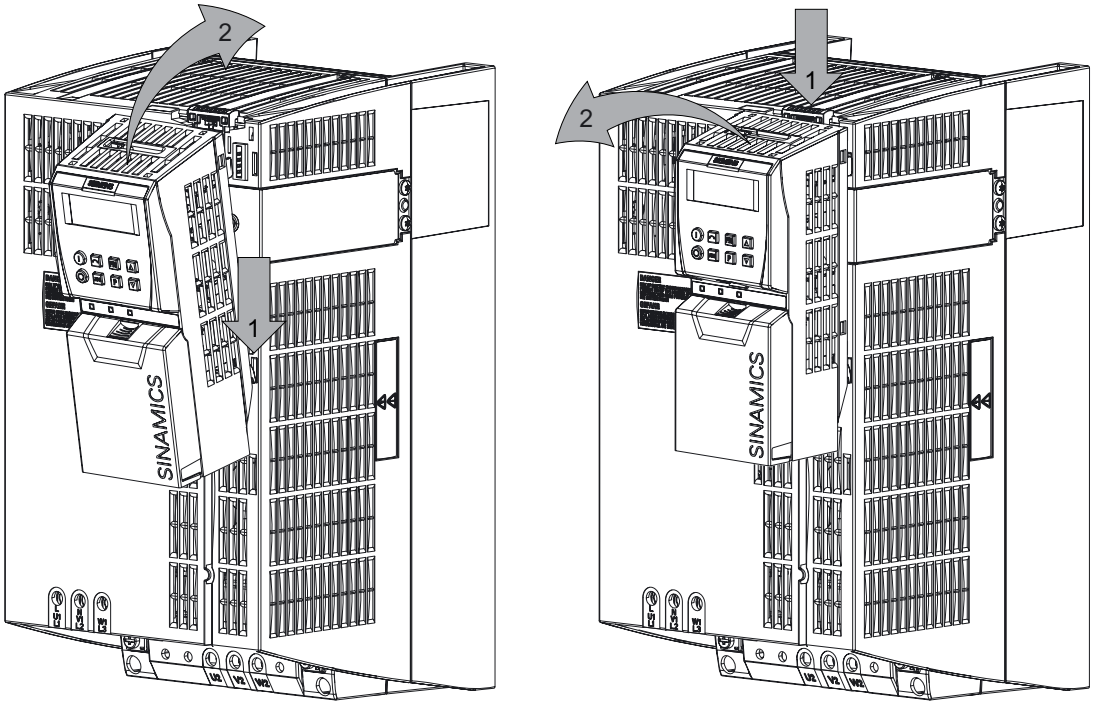

Figure 3-9 Fitting the Control Unit CU240S to the Power Module FSC

Connecting

4

4.1 Safety notes for the electrical installation

Electrical Installation

⚠ WARNING
Power and motor connections A fixed location, non varying connection is necessary because of a leakage current > 3.5 mA. The inverter must always be grounded. If it is not grounded correctly, extremely dangerous conditions may arise which could prove potentially fatal. Isolate the mains electrical supply before making or changing connections to the unit. The terminals of the Inverter can carry dangerous voltages even if the inverter is inoperative. Wait at least 5 minutes to allow the unit to discharge after switching off the line supply before carrying out any installation work. When connecting the line supply to the inverter, make sure that the terminal case of the motor is closed. When changing from the ON to OFF-state of an operation if an LED or other similar display is not lit or active; this does not indicate that the unit is switched-off or powered-down. Ensure that the inverter is configured for the correct supply voltage – it must not be connected to a higher voltage supply.

⚠ WARNING
Filtered drives can only be used on power systems with grounded starpoint.

4.2 Power distribution systems

Overview of Power Distribution Systems

The power distribution systems described below, as defined in EN 60950 , have been considered in the design of the inverter. In the next figures three phase systems are outlined. The three phase inverter must be connected to L1, L2 and L3. PE must always be connected. The inverter will operate with most supply systems.

Table 4- 1 Power distribution systems

TN-S Power System	TN-C-S Power System	TN-C Power System	TT Power System	IT Power System
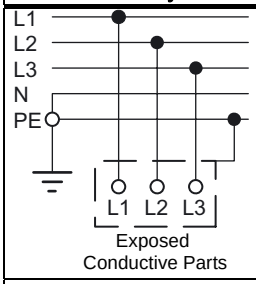	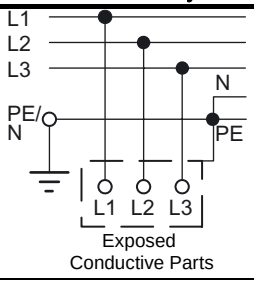	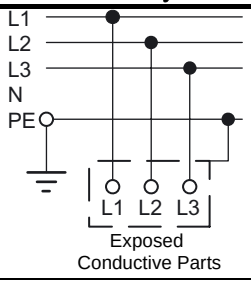	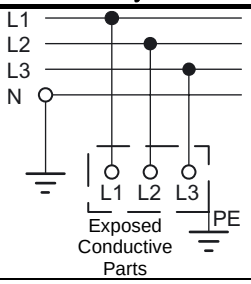	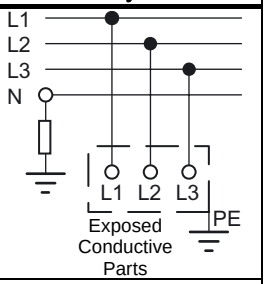
A TN-S power system has separate neutral and protective ground conductors throughout the system.	In a TN-C-S power system, the neutral and protective functions are combined in a single part of the system.	In a TN-C power system, the neutral and protective functions are combined in a single conductor throughout the system.	A TT power system has one point directly grounded, the exposed conductive parts of the installation being connected to a ground, which is electrically independent of the ground of the power system.	An IT power system has no direct connection to ground - instead the exposed parts of the electrical installation are grounded.

⚠ WARNING

Filtered drives can only be used on power systems with grounded starpoint.

Note

For fulfilling the protection class I according to EN 61140 the input and output supply voltages have to be earthed.

4.3 Operation with ungrounded (IT) supplies

Operation with ungrounded (IT) supplies

IT supplies are fully isolated from the protective earth system, usually by an isolating transformer. It should be noted, however, that a protective earth is still provided.

⚠ WARNING
Power Modules with built-in filters or external filters must not be used with IT supplies.

If the Power Module connected to an IT supply is required to remain operational if an input or output phase is connected to ground, then an output reactor must be fitted to prevent overcurrent tripping. The probability of overcurrent tripping without output reactor increases with the size of the IT supply.

Operation of the Power Modules without a protective earth is not permitted under any circumstances.

4.4 Operation with Residual Current Devices (RCD)

Operation with Residual Current Devices (RCD)

If an RCD (also referred to as an ELCB or a RCCB) is fitted, the Power Module will operate without nuisance tripping provided that:

- A type B RCD is used.
- The trip limit of the RCD is 300 mA.
- The neutral of the supply is grounded.
- Only one Power Module is supplied from each RCD.
- The output cables are less than 50 m (164 ft) screened or 100 m (328 ft) unscreened.

If no RCD is used, the touch protection can be achieved by double insulation or by separating the Power Module from the mains system using a transformer.

4.5 Motor cable length and cross section

Permissible Cable Length

The use of unshielded motor cables is possible. However to meet C2 EMI class, shielded cables with appropriate EMI installation are required.

Table 4- 2 The inverters will operate at full specification with cable lengths as follows

- Screened 25 m (80 ft) for filtered drives
  50 m (160 ft) for unfiltered drives
- Unscreened 100 m (330 ft) for both filtered and unfiltered drives

Table 4- 3 Using an output reactor or a sine-wave filter as specified in the catalog, the following cable lengths are possible

Frame size	HO power rating	Max. permissable motor cable length using …			
		… an output reactor with …		… a sine-wave filter with …	
		… screened cables	… unscreened cables	… screened cables	… unscreened cables
FSC	5.5 kW ... 11 kW	100 m 110 yd.	150 m 160 yd.	200 m 220 yd.	300 m 330 yd.
FSD … FSF	15 kW ... 75 kW	200 m 220 yd.	300 m 330 yd.	200 m 220 yd.	300 m 330 yd.

⚠ CAUTION

The control cables must be laid separately from the power cables. The connection must be carried out as shown in the installation section in this manual, to prevent inductive and capacitive interference from affecting the correct function of the system.

Note

Ensure that the appropriate circuit-breakers or fuses with the specified current rating are connected between the power supply and the inverter. The technical data contain information about the circuit breaker and fuses .

Table 4- 4 Cable cross section

Frame size	Cable cross section		Tightening torques	
kW	mm²	AWG	Nm	lbf in
FSC				
5.5:	4.0 … 10	12 … 8	2.3	20
7.5:	4.0 … 10	12 … 8	2.3	20
11:	6.0 … 10	10 … 8	2.3	20
FSD				
15:	10 … 35	7 … 2	6	53
18.5:	10 … 35	7 … 2	6	53
22:	16 … 35	5 … 2	6	53
FSE				
30:	25 … 35	3 … 2	6	53
37:	25 … 35	3 … 2	6	53
FSF				
45:	35 … 120	2 … 4/0	13	115
55:	70 … 120	2/0 … 4/0	13	115
75:	95 … 120	3/0 … 4/0	13	115

⚠ CAUTION

Cable cross section for grounding

For power cables up to 10 mm² (Cu) or 16 mm² (Al) the earth cable must be at least as big as the power cables.

For power cables larger than 10 mm² (Cu) or 16 mm² (Al) the earth cable must be at least 10 mm² (Cu) or 16 mm² (Al), but need not exceed these sizes.

4.6 Access to power and motor terminals

Access to power and motor terminals

The terminals for frame size C can be accessed directly, without removing any cover.

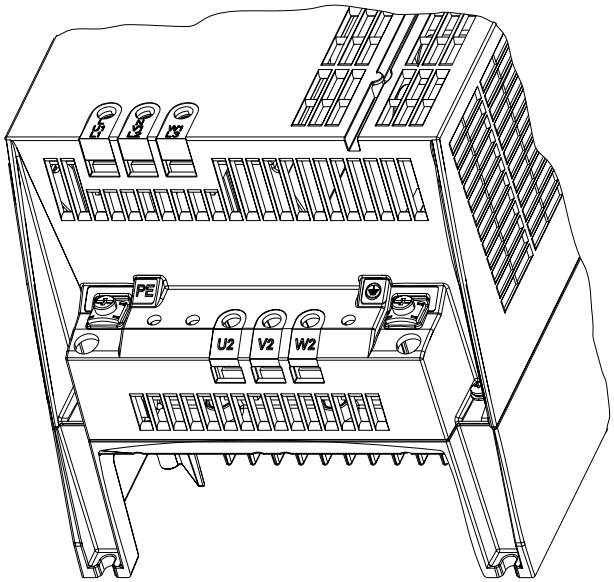

Figure 4-1 Access to power and motor terminals on FSC

Frame size D, E and F terminals covers are accessed by releasing the latch on the side of the terminal covers with a suitable flat-bladed screwdriver. The cover can then be pushed upwards and locked into position, as shown in the figure below.

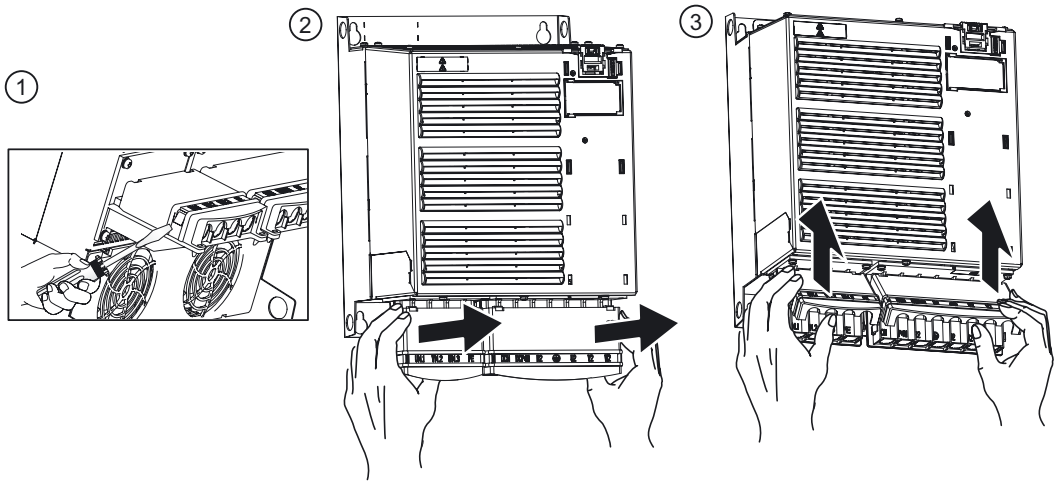

Figure 4-2 Access to power and motor terminals on FSD, FSE and FSF

4.7 Power and motor connections

Power and motor terminal layout

The figures below show the layout of the power and motor terminals of the Power Module.

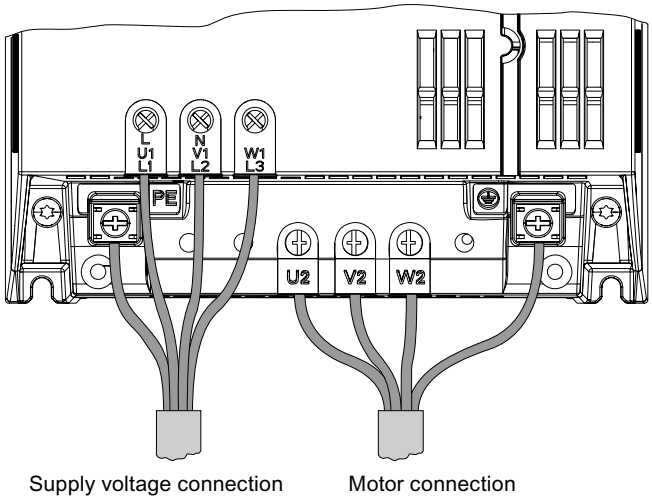

Figure 4-3 Power and motor terminals FSC

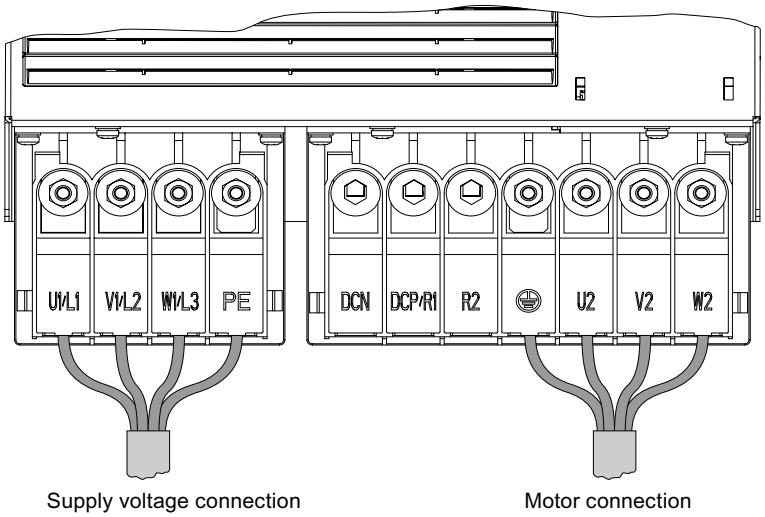

Figure 4-4 Power and motor terminals FSD … FSF

Rules for connecting the Power Module FSD … FSF

Use ring-type lugs acc. to DIN 462 for the terminals of the Power Module FSD … FSF. Standard lugs and terminals do not match.

The figure shows an adequate ring-type lug on the left side and an unsuitable standard lug on the right side.

Ensure that the terminals cover can be closed, if two cables are connected to the same terminal. An inverter with open terminals cover provides only IP00 protection level.

The figure shows a Power Module FSF with two 50 mm² cables on each terminal, which makes it impossible to close the terminals cover.

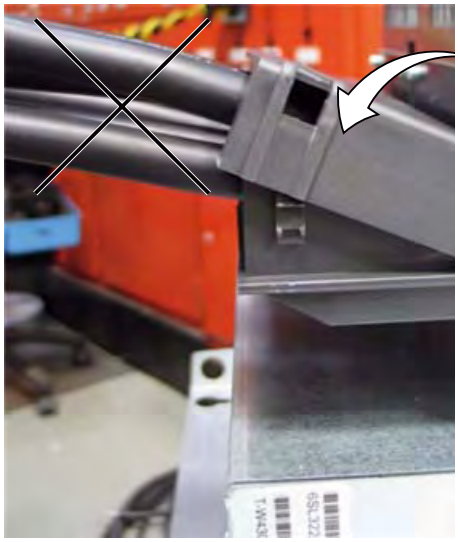

4.8 ESD guidelines

Avoiding Electromagnetic Interference (EMI)

The inverters are designed to operate in an industrial environment where a high level of EMI can be expected. Most installations do not give problems. However, it is good engineering practice to conform to the following guidelines - this will reduce the likelyhood of problems during operation.

Actions to take

- Ensure that all equipment in the cubicle is well grounded using short, thick grounding cable connected to a common star point or busbar.
- Make sure that any control equipment (such as a PLC) connected to the inverter is connected to the same ground or star point as the inverter using a short thick link.
- Connect the return ground from the motors directly to the ground connection (PE) on the associated inverter.
- Flat conductors are preferred as they have lower impedance at higher frequencies.
- Terminate the ends of the cable neatly, ensuring that unscreened wires are as short as possible.
- Separate the control cables from the power cables as much as possible, using separate trunking, if the cables cross they should cross at 90º to each other.
- Whenever possible, use screened leads for the connections to the control circuitry.
- Ensure that the contactors in the cubicle are suppressed, either with R-C suppressors for AC contactors or 'flywheel' diodes for DC contactors fitted to the coils. Varistor suppressors are also effective. This is important when the contactors are controlled from the inverter relay.
- Use screened or armored cables for the motor connections and ground the screen at both ends using the cable clamps.

⚠ WARNING
Safety regulations must not be compromised when installing inverters!

Screening methods

For all frame sizes the Screen Termination Kit is supplied as an optional extra. It allows easy and efficient connection of the necessary screening. For further details on the Screen Termination Kit, please refer to the SINAMICS G120 catalog.

Screening without a Screen Termination Kit

In order to meet radiated emissions a screen termination kit must be used. Screening without a screen termination kit is only suitable for installation in a metal cabinet.

Should a Screen Termination Kit not be available, the inverter then can be screened using the methodology shown in the figure below. This diagram shows both methodologies of screening.

Note

The EMI illustration below is not to scale. The terminal cover on Frame Size D cannot be removed. It has been removed to show the correct cable connection for the terminals.

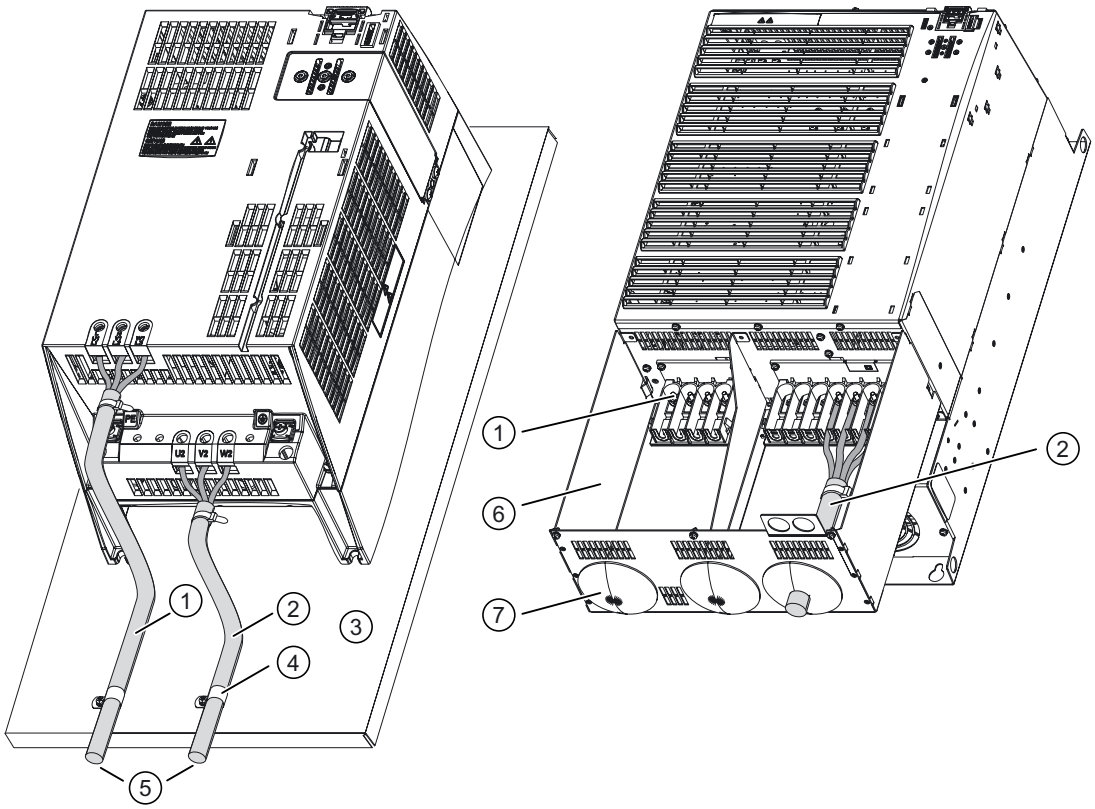

① Line power input
② Motor cable
③ Metal back plate
④ Use suitable clips to fix motor and power cable screen securely to metal back plate
⑤ Screen cables
⑥ Screen Termination Kit
⑦ Gromments

Figure 4-5 Example of wiring to minimize the effect of EMI

Service and maintenance 5

5.1 Maintenance

The purpose of maintenance is to preserve the specified condition of the Power Module. Dirt and contamination must be removed regularly and parts subject to wear replaced. The Power Module comprises mostly electronic components. Apart from the fan(s), the unit, therefore, contains hardly any components that are subject to wear or that require maintenance or servicing.

The following points must generally be observed.

Dust deposits

Dust deposits inside the Power Module must be removed at regular intervals by qualified personnel in line with the relevant safety regulations. The unit must be cleaned using a brush and vacuum cleaner, and dry compressed air (max. 1 bar) for areas that cannot be easily reached.

Ventilation

When installing the devices in a cabinet, make sure that the cabinet ventilation slots are not obstructed. The fan must be checked to make sure that it is functioning correctly.

Cable and screw terminals

Cable and screw terminals must be checked regularly to ensure that they are secure in position, and if necessary, retightened. Cabling must be checked for defects. Defective parts must be replaced immediately.

Note

The actual intervals at which maintenance procedures are to be performed depend on the installation conditions and the operating conditions.

Siemens offers its customers support in the form of a service contract. For further details, contact your regional office or sales office.

5.2 Replacing the cooling fan

The service life of the cooling fan

The average service life of the cooling fans is 50,000 hours. In practice, however, the service life may deviate from this value. Especially a dusty environment can occlude the fan.

The fan must be replaced in good time to ensure that the inverter is available.

Cooling fan replacement for FSC

Preparatory steps

- Power-down the inverter
- Remove the Control Unit from the inverter
- Disconnect all the cables from the Power Module
- Place the Power Module face-down on a clean and safe surface

Removal

1. Using a posi-drive screwdriver, remove the fan retaining screws
2. Release the fan cable connector(s)
3. Slide the cooling fan out from the inverter

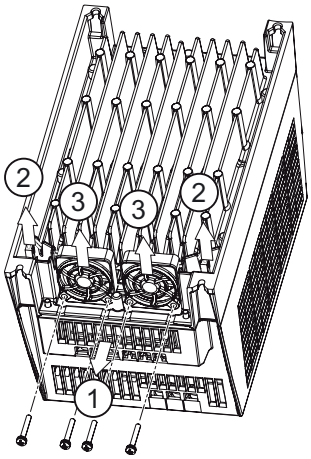

Figure 5-1 Cooling fan removal FSC (5.5 kW … 15 kW)

Installation

For re-installation, carry out the above steps in reverse order.

Cooling fan replacement for FSD … FSF

Preparatory steps

- Power-down the inverter
- Remove the Control Unit from the inverter
- Disconnect all the cables from the Power Module
- Place the Power Module face-down on a clean and safe surface

Removal

1. Remove the fan retaining board
2. Release the fan cable connectors
3. Remove the cooling fan out from the inverter

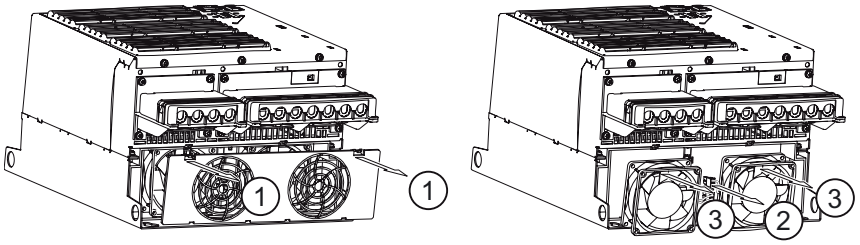

Figure 5-2 Cooling fan removal FSD and FSE (15 kW … 37 kW)

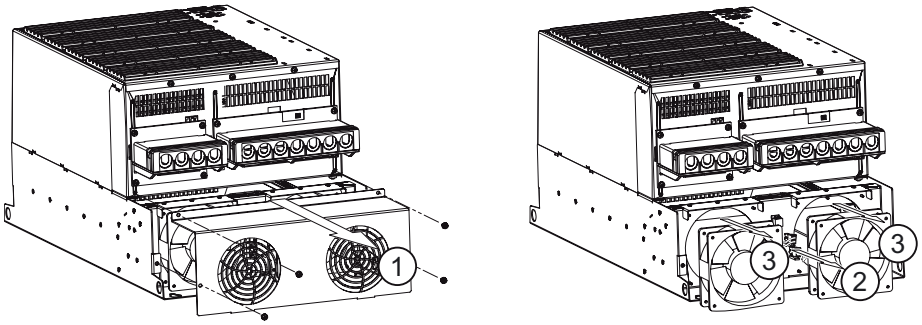

Figure 5-3 Cooling fan removal FSF (45 kW … 75 kW)

Installation

For re-installation, carry out the above steps in reverse order.

Technical specifications

6

Common performance ratings of the Power Module

Table 6- 1 Performance ratings

Feature	Specification
Line operating voltage	3 AC 380 V … 480 V ± 10% The permissible voltage depends on the operational altitude
Input frequency	47 Hz … 63 Hz
Modulation depth	87% (The maximal output voltage is 87% of the input voltage)
Power factor λ	0.9
Overload capability (HO) 5.5 kW ... 75 kW	1.5 x Nominal output current (150% overload) for 57 s every 300 s
	2 x Nominal output current (200% overload) for 3 s every 300 s
Overload capability (LO) 7.5 kW ... 90 kW	1.1 x Nominal output current (110% overload) for 57 s every 300 s
	1.5 x Nominal output current (150% overload) for 3 s every 300 s
Inrush current	Less than rated input current
Pulse frequency	4 kHz standard The pulse frequency can be changed manually in 2 kHz steps. Increasing the pulse frequencies above standard leads to an output current reduction.
Electromagnetic compatibility	Power Modules with untegrated class A filters according to EN 55011 available.
Braking	Dynamic braking with regeneration (up to 100% output rating)
Protection level	IP20
Temperature range without derating (HO)	5.5 kW ... 75 kW 0 °C … +50 °C (14 °F … 122 °F)
Temperature range without derating (LO)	0 °C … +40 °C (14 °F … 104 °F)
Temperature range with derating	Higher operational temperature is possible with power derating
Storage temperature	-40 °C … +70 °C (-40 °F … 158 °F)
Humidity	< 95% RH - non-condensing In areas of high relative humidity, measures should be taken to ensure that condensation does not form within or around the SINAMICS G120. Anti-condensation heaters are commonly used to prevent the formation of condensation.
Pollution	According pollution degree level 2 Do not install the SINAMICS G120 in an environment which contains atmospheric pollutants such as dust and/or corrosive gases.

Feature	Specification
Shock and vibration	Do not drop the SINAMICS G120 or expose to sudden shock. Do not install the SINAMICS G120 in an area where it is likely to be exposed to constant vibration.
Electromagnetic radiation	Do not install the SINAMICS G120 near sources of electromagnetic radiation.
Operational altitude without derating	Up to 1000 m (3300 ft) above sea level
Operational altitude with derating	Higher operational altitude is possible with power derating

Relationship between pulse frequency and current reduction

Table 6- 2 Current reduction depending on pulse frequency

Rated Power (LO)	Base load current (LO)	Base load current (LO) at pulse frequency of					
	4 kHz	6 kHz	8 kHz	10 kHz	12 kHz	14 kHz	16 kHz
kW	A	A	A	A	A	A	A
7.5	18.0	12.5	11.9	10.6	9.20	7.90	6.60
11	25.0	18.1	17.1	15.2	13.3	11.4	9.50
15	32.0	24.7	23.4	20.8	18.2	15.6	12.8
18.5	38.0	32.3	26.6	22.8	19.0	17.1	15.2
22	45.0	38.3	31.5	27.0	22.5	20.3	18.0
30	60.0	51.0	42.0	36.0	30.0	27.0	24.0
37	75.0	63.8	52.5	45.0	37.5	33.8	30.0
45	90.0	76.5	63.0	54.0	45.0	40.5	36.0
55	110	93.5	77.0	--	--	--	--
75	145	123	102	--	--	--	--
90	178	151	125	--	--	--	--

Operating temperature derating

The operating temperature range is shown diagramatically in the figure below:

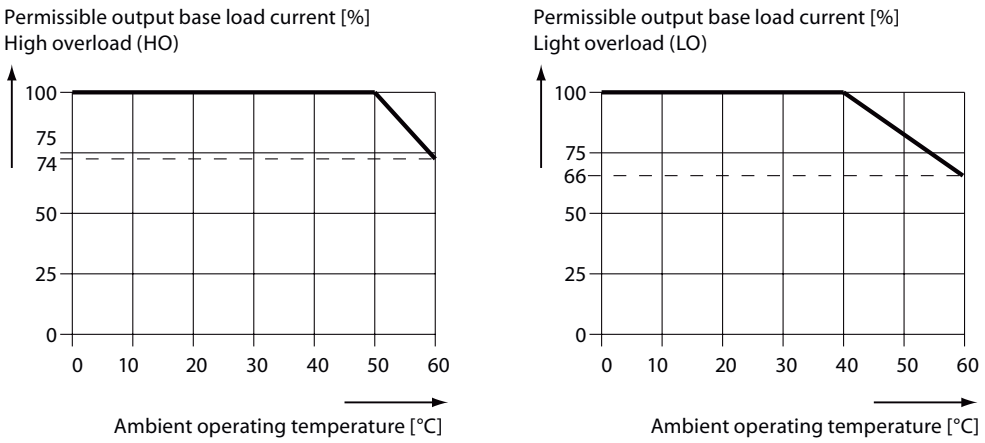

Figure 6-1 Current derating for temperature

Operational altitude derating

The figures below show the derating required according to altitude.

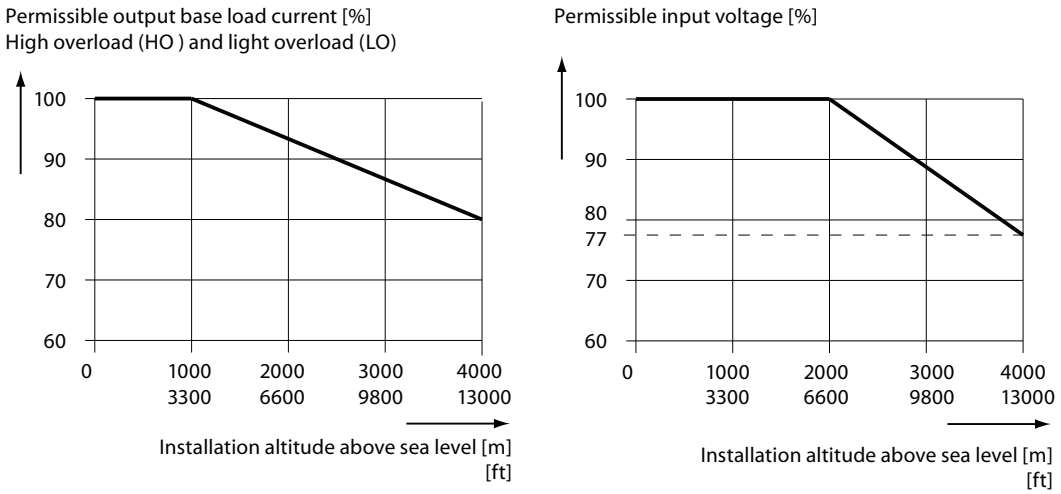

Current derating for altitude

Voltage derating for altitude

Power Module Specifications

⚠ CAUTION

High Overload (HO) and Light Overload (LO) input currents

The input current at the rated operating point - applies for the short-circuit voltage of the line supply V_k = 1% referred to the rated Power Module power and a rated line supply voltage of 400 V.

NOTICE

UL certified Fuses must be used

In order that the system is in compliance with UL, UL certified fuses, circuit-breaker or self protected combination motor controller must be used.

Table 6- 3 Frame Sizes C, 3 AC 380 V … 480 V, ± 10%

Order No. filtered	6SL3225-	0BE25-5AA0	0BE27-5AA0	0BE31-1AA0
Rated power based on HO-loading	kW	5.5	7.5	11
	hp	7.5	10	15
Power loss	kW	0.240	0.30	0.40
Input base load current (HO)	A	13.2	19	26
Output base load current (HO)	A	13.2	19	26
Input base load current (LO)	A	18	25	32
Output base load current (LO)	A	18	25	32
Fuse	A	20	32	35
Required cooling air flow	l/s	38	38	38
	CFM	80	80	80
Input Cable / Output Cable	mm^2	4.0 … 10	4.0 … 10	4.0 … 10
	AWG	12 … 8	12 … 8	12 … 8
Weight	kg	7.5	7.5	7.5
	lb	17	17	17

Table 6- 4 Frame Sizes D, 3 AC 380 V … 480 V, ± 10%

Order No.	filtered	6SL3225-	0BE31-5AA0	0BE31-8AA0	0BE32-2AA0
	unfiltered		0BE31-5UA0	0BE31-8UA0	0BE32-2UA0
Rated power based on HO-loading		kW	15	18.5	22
		hp	20	25	30
Power Loss		kW	0.44	0.55	0.72
Input base load current (HO)		A	30	36	42
Output base load current (HO)		A	32	38	45
Input base load current (LO)		A	36	42	56
Output base load current (LO)		A	38	45	60
Fuse		A	50	63	80
Required cooling air flow		l/s	22	22	39
		CFM	47	47	83
Input Cable / Output Cable		mm^2	10 … 35.0	10 … 35.0	10 … 35.0
		AWG	7 … 2	7 … 2	7 … 2
Weight	filtered	kg	15.4	15.4	16.0
		lb	34.0	34.0	35.3
	unfiltered	kg	13.0	13.0	13.0
		lb	28.7	28.7	28.7

Table 6- 5 Frame Sizes E, 3 AC 380 V … 480 V, ± 10%

Order No.	filtered	6SL3225-	0BE33-0AA0	0BE33-7AA0
	unfiltered		0BE33-0UA0	0BE33-7UA0
Rated power based on HO-loading		kW	30	37
		hp	40	50
Power Loss		kW	1.0	1.3
Input base load current (HO)		A	56	70
Output base load current (HO)		A	60	75
Input base load current (LO)		A	70	84
Output base load current (LO)		A	75	90
Fuse		A	100	125
Required cooling air flow		l/s	22	39
		CFM	47	83
Input Cable / Output Cable		mm^2	25.0 … 35.0	25.0 … 35.0
		AWG	3 … 2	3 … 2
Weight	filtered	kg	21.0	21.0
		lb	46.3	46.3
	unfiltered	kg	16.0	16.0
		lb	35.3	35.3

Table 6- 6 Frame Sizes F, 3 AC 380 V … 480 V, ± 10%

Order No.	filtered	6SL3225-	0BE34-5AA0	0BE35-5AA0	0BE37-5AA0
	unfiltered		0BE34-5UA0	0BE35-5UA0	0BE37-5UA0
Rated power based on HO-loading		kW	45	55	75
		hp	60	75	100
Power Loss		kW	1.5	2.0	2.4
Input base load current (HO)		A	84	102	135
Output base load current (HO)		A	90	110	145
Input base load current (LO)		A	102	135	166
Output base load current (LO)		A	110	145	178
Fuse		A	160	200	250
Required cooling air flow		l/s	94	94	117
		CFM	200	200	250
Input Cable / Output Cable		mm^2	35.0 … 120	35.0 … 120	35.0 … 120
		AWG	2 … 4/0	2 … 4/0	2 … 4/0
Weight	filtered	kg	51.0	51.0	51.0
		lb	112	112	112
	unfiltered	kg	36.0	36.0	36.0
		lb	79.4	79.4	79.4

Accessories 7

7.1 Reactor and filter

Line filter

The Power Module complies with a higher radio interference class when an additional line filter is used.

Output reactor

Output reactors reduce the voltage loading on the motor windings. At the same time, the capacitive charge/discharge currents, which place an additional load on the power section when long motor cables are used, are reduced.

Sine-wave filter

The sine-wave filter is designed to limit the rate of rise of voltage and the capacitive charge or discharge currents which usually occur with inverter operation.

Connecting reactor and filter to the Power Module

The following drawings show the connecting order of the power components. Shielded cables are necessary if a line filter is used.

Line fuses and contactor have to be installed between the line filter and the mains system.

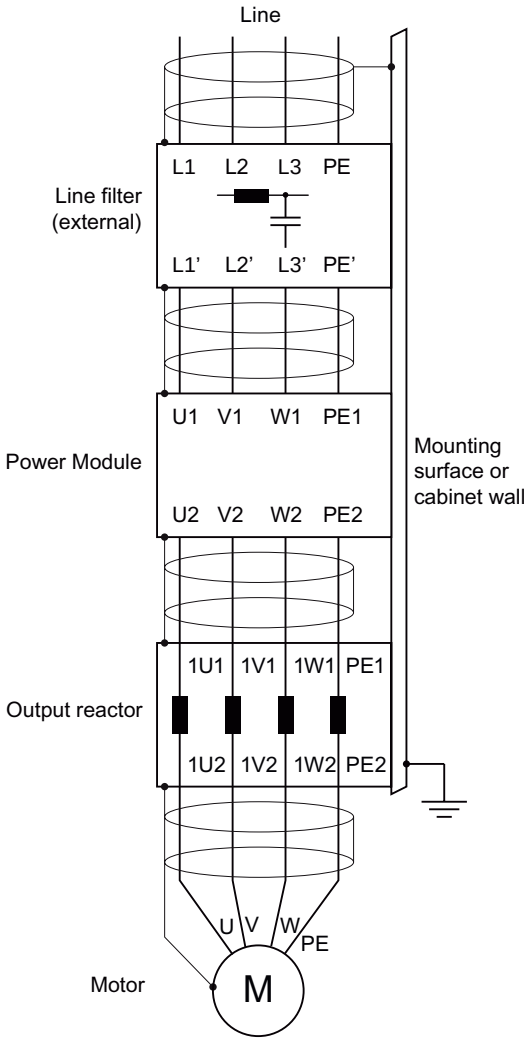

Connecting power components with output reactor

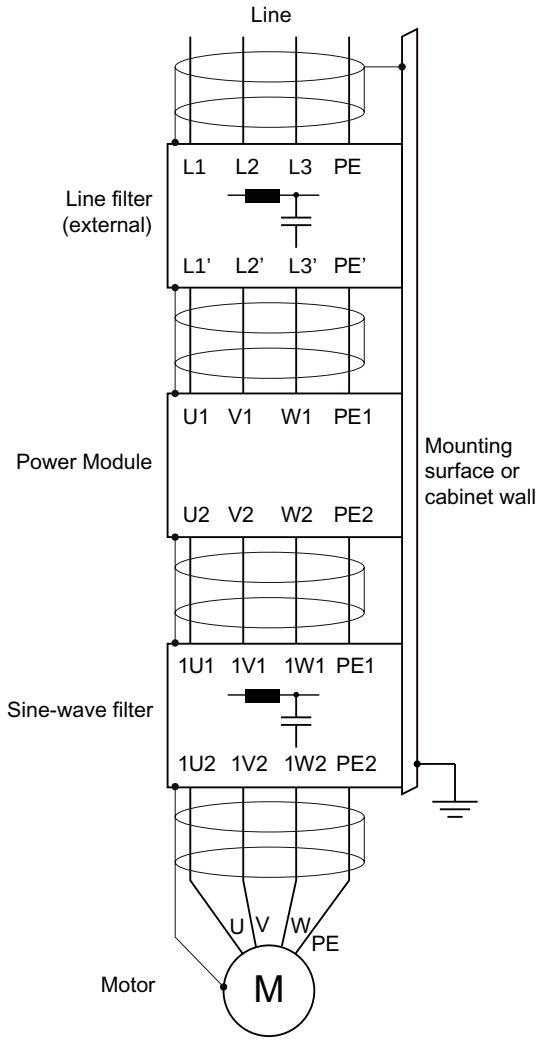

Connecting power components with sine-wave filter

Mounting base components

The components for the Power Modules FSC (5.5 kw … 11 kW) are designed as base components, that is, the component is mounted on the cabinet wall and the Power Module above it in a space-saving construction. Up to two base components can be mounted above one another.

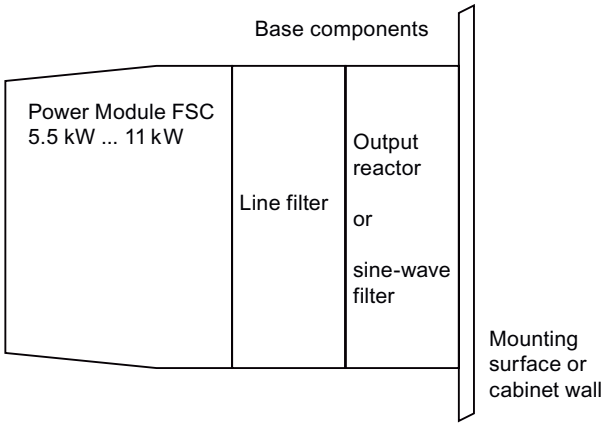

Figure 7-1 Mounting base components

7.1.1 Line filter

Installing the line filter as base component

The line filters associated with the Power Modules of a rated power (HO) up to 11 kW are designed as base components. The line filter is attached to the mounting surface and the Power Module is mounted directly on the line filter.

The cables to the Power Module are already connected to the line filter. The line filter is connected to the line supply through terminals.

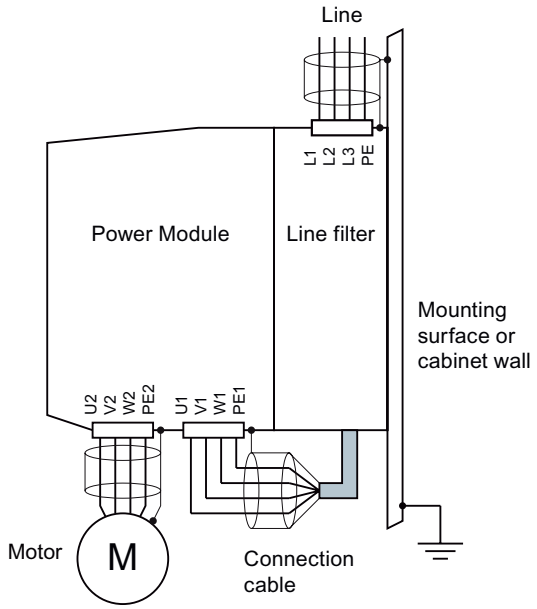

Figure 7-2 Connecting the line filter as base component

The overall and mounting dimensions of the line filter are written in the technical specifications.

Installing the line filter as lateral mounting component

The line filters for Power Modules with a rated power (HO) of more than 11 kW and line filters from third party suppliers have to be mounted laterally.

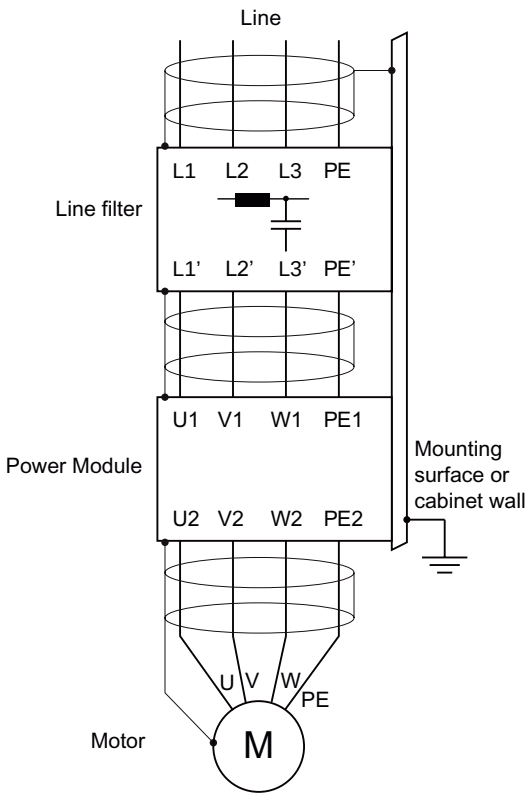

Figure 7-3 Connecting the line filter as lateral component

Shielded cables must be used from the line filter to the motor. The filter has to be installed as close as possible to the line entry of the cubicle.

Technical specifications of the line filter

The major electrical specification of the line filter is the same as for the suitable Power Module. This applies to:

- line voltage
- line frequency
- rated current

The admissible ambient conditions of the line filter are the same as for the suitable Power Module. This applies to:

- storage and transport temperature
- operating temperature
- relative humidity
- shock and vibration load

Table 7- 1 Technical specifications of the line filter class B

Feature	Suitable for Power Module with rated power (HO) of
	5.5 kW ... 11 kW
	FSC
MLFB of the line filter	6SL3203-0BD23-8SA0
MLFB of the suitable Power Module	6SL3225-0BE25-5AA0 6SL3225-0BE27-5AA0 6SL3225-0BE31-1AA0
Power loss at 50 Hz	7.5 W ... 15 W
Line connection	Screw terminals 4 mm²
Connection to Power Module	Cable, 400 mm length
Degree of protection	IP20
Overall dimensions Width Height Depth	 190 mm 362 mm 55 mm
Fixing dimensions Width Height	 156 mm 232 mm
Fixing screw	4 × M5
Weight	2.3 kg
Possible as base component	yes

7.1.2 Output reactor

Installing the output reactor as base component

The output reactors for Power Modules with a rated power (HO) up to 11 kW are designed as base components. The output reactor is attached to the mounting surface and the Power Module is mounted directly on the output reactor.

The cables to the Power Module are already connected to the output reactor. The output reactor is connected to the motor through terminals.

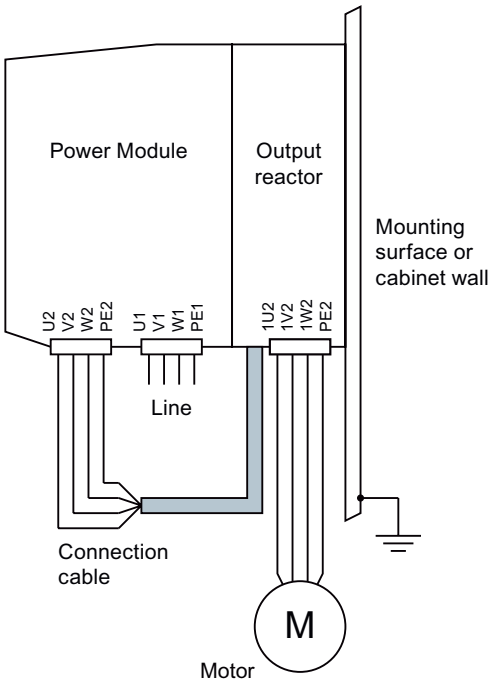

Figure 7-4 Connecting the output reactor as base component

The overall and mounting dimensions of the output reactor are written in the technical specifications.

Installing the output reactor as lateral mounting component

The output reactors for Power Modules with a rated power (HO) of more than 11 kW have to be mounted laterally.

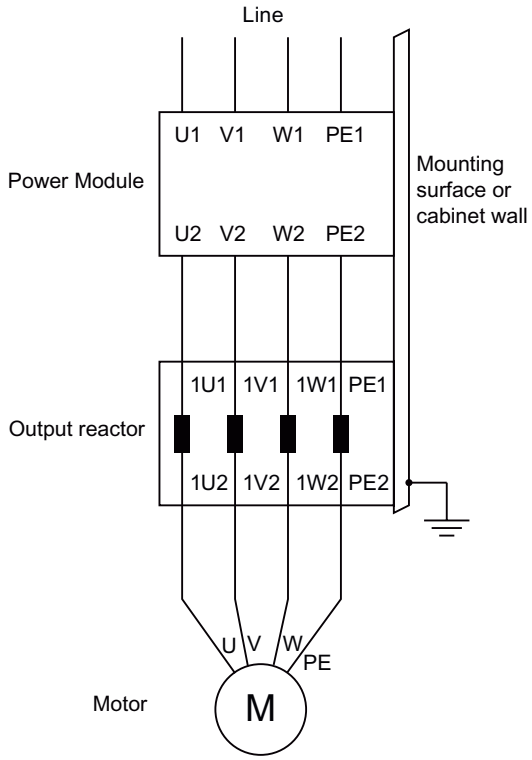

Figure 7-5 Connecting the output reactor as lateral component

For more information see http://support.automation.siemens.com/WW/view/en/22103628

Technical specifications of the output reactors

The major electrical specification of the output reactors is the same as for the suitable Power Module. This applies to:

- voltage
- rated current

The maximum permissible output frequency of the Power Module is 150 Hz when an output reactor is used – the pulse frequency must not exceed 4 kHz.

The admissible ambient conditions of the output reactors are the same as for the suitable Power Module. This applies to:

- storage and transport temperature
- operating temperature
- relative humidity
- shock and vibration load

Table 7- 2 Technical specifications of the output reactors (table 1 of 3)

Feature	Suitable for Power Module with rated power (HO) of		
	5.5 kW … 11 kW	15 kW	18.5 kW
	FSC	FSD	FSD
MLFB of the output reactor	6SL3202-0AJ23-2CA0	6SE6400-3TC05-4DD0	6SE6400-3TC03-8DD0
MLFB of the suitable Power Module	6SL3225-0BE25-5 . A0 6SL3225-0BE27-5 . A0 6SL3225-0BE31-1 . A0	6SL3225-0BE31-5 . A0	6SL3225-0BE31-8 . A0
Power loss at 50/60 Hz	60 W	200 W	200 W
Motor connection	Screw terminals 6 mm²	Flat connector for M6 cable lug	Flat connector for M6 cable lug
Connection to Power Module	Cable, 350 mm length	Flat connector for M6 cable lug	Flat connector for M6 cable lug
Degree of protection	IP00	IP00	IP00
Overall dimensions Width Height Depth	 189 mm 334 mm 80 mm	 225 mm 210 mm 150 mm	 225 mm 210 mm 150 mm
Fixing dimensions Width Height	 156 mm 232 mm	 70 mm 176 mm	 94 mm 176 mm
Fixing screw	4 × M5	4 × M6	4 × M6
Weight	9 kg	10.5 kg	16 kg
Possible as base component	yes	no	no

Table 7- 3 Technical specifications of the output reactors (table 2 of 3)

Feature	Suitable for Power Module with rated power (HO) of		
	22 kW	30 kW	37 kW
	FSD	FSE	FSE
MLFB of the output reactor	6SE6400-3TC05-4DD0	6SE6400-3TC08-0ED0	6SE6400-3TC07-5ED0
MLFB of the suitable Power Module	6SL3225-0BE32-2 . A0	6SL3225-0BE33-0 . A0	6SL3225-0BE33-7 . A0
Power loss at 50/60 Hz	200 W	170 W	270 W
Motor connection	Flat connector for M6 cable lug	Flat connector for M6 cable lug	Flat connector for M6 cable lug
Connection to Power Module	Flat connector for M6 cable lug	Flat connector for M6 cable lug	Flat connector for M6 cable lug
Degree of protection	IP00	IP00	IP00
Overall dimensions Width Height Depth	 225 mm 210 mm 150 mm	 225 mm 210 mm 150 mm	 270 mm 248 mm 209 mm
Fixing dimensions Width Height	 70 mm 176 mm	 70 mm 176 mm	 101 mm 200 mm
Fixing screw	4 × M6	4 × M6	4 × M8
Weight	10.5 kg	10.5 kg	25 kg
Possible as base component	no	no	no

Table 7- 4 Technical specifications of the output reactors (table 3 of 3)

Feature	Suitable for Power Module with rated power (HO) of		
	45 kW	55 kW	75 kW
	FSF	FSF	FSF
MLFB of the output reactor	6SE6400-3TC14-5FD0	6SE6400-3TC15-4FD0	6SE6400-3TC14-5FD0
MLFB of the suitable Power Module	6SL3225-0BE34-5 . A0	6SL3225-0BE35-5 . A0	6SL3225-0BE37-5 . A0
Power loss at 50/60 Hz	470 W	250 W	470 W
Motor connection	Flat connector for M8 cable lug	Flat connector for M8 cable lug	Flat connector for M8 cable lug
Connection to Power Module	Flat connector for M8 cable lug	Flat connector for M8 cable lug	Flat connector for M8 cable lug
Degree of protection	IP00	IP00	IP00
Overall dimensions Width Height Depth	 350 mm 321 mm 288 mm	 270 mm 248 mm 209 mm	 350 mm 321 mm 288 mm
Fixing dimensions Width Height	 138 mm 264 mm	 101 mm 200 mm	 138 mm 264 mm
Fixing screw	4 × M8	4 × M8	4 × M8
Weight	52 kg	52 kg	52 kg
Possible as base component	no	no	no

7.1.3 Sine-wave filter

Installing the sine-wave filter as base component

The sine-wave filters for Power Modules with a rated power (HO) up to 11 kW are designed as base components. The sine-wave filter is attached to the mounting surface and the Power Module is mounted directly on the sine-wave filter. The cables to the Power Module are already connected to the sine-wave filter. The sine-wave filter is connected to the motor through terminals.

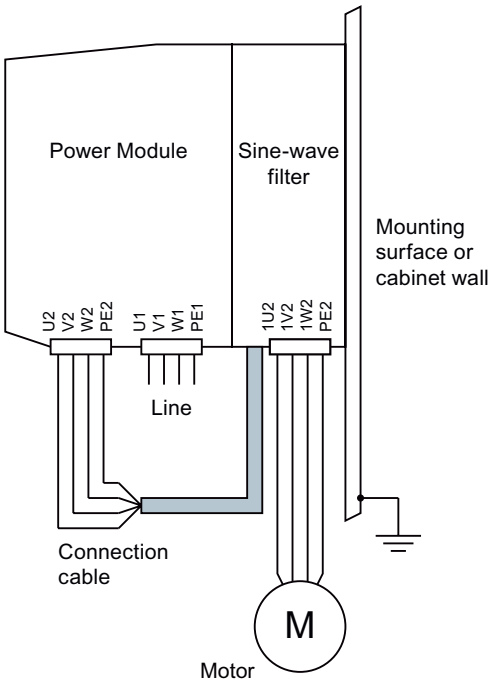

Figure 7-6 Connecting the sine-wave filter as base component

The overall and mounting dimensions of the sine-wave filter are written in the technical specifications.

Installing the sine-wave filter as lateral mounting component

The sine-wave filter for Power Modules with a rated power (HO) of more than 11 kW has to be mounted laterally.

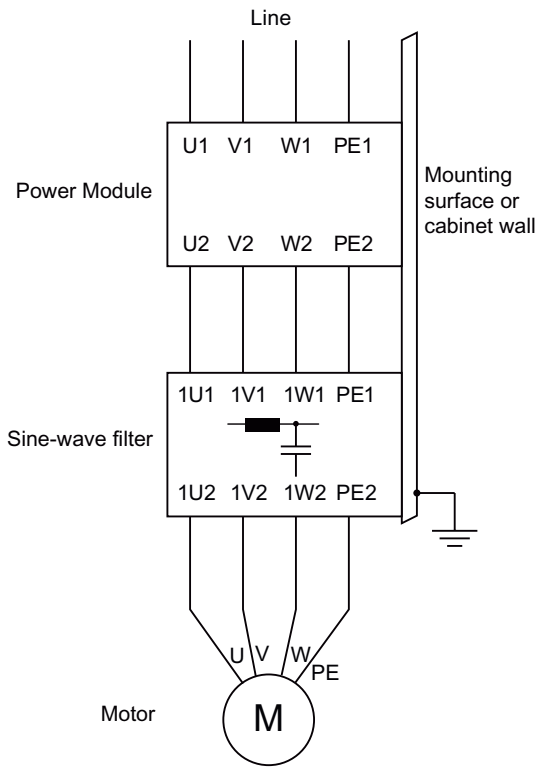

Figure 7-7 Connecting the sine-wave filter as lateral component

For more information see http://support.automation.siemens.com/WW/view/en/29522775

Technical specifications of the sine-wave filter

The major electrical specification of the sine-wave filter is the same as for the suitable Power Module. This applies to:

- voltage
- current

The maximum permissible output frequency of the Power Module is 150 Hz when a sine-wave filter is used – the pulse frequency must not exceed 8 kHz.

The admissible ambient conditions of the sine-wave filter are the same as for the suitable Power Module. This applies to:

- storage and transport temperature
- operating temperature
- relative humidity
- shock and vibration load

Table 7- 5 Technical specifications of the sine-wave filters (table 1 of 3)

Feature	Suitable for Power Module with rated power (HO) of		
	5.5 kW	7.5 kW … 11 kW	
	FSC	FSC	
MLFB of the sine-wave filter	6SL3202-0AE22-0SA0	6SL3202-0AE23-3SA0	
MLFB of the suitable Power Module	6SL3225-0BE25-5 . A0	6SL3225-0BE27-5 . A0 6SL3225-0BE31-1 . A0	
dv/dt limiting	≤ 500 V/µs	≤ 500 V/µs	
Power loss at 50 Hz	40 W	65 W	
Motor connection	Screw terminals 10 mm²	Screw terminals 10 mm²	
Connection to Power Module	Cable, 500 mm length	Cable, 500 mm length	
Degree of protection	IP20	IP20	
Overall dimensions Width Height Depth	 189 mm 336 mm 140 mm	 189 mm 336 mm 140 mm	
Installation clearance Top Bottom Side	 100 mm 100 mm 100 mm	 100 mm 100 mm 100 mm	
Fixing dimensions Width Height	 167 mm 323 mm	 167 mm 323 mm	
Fixing screw	4 × M5	4 × M5	
Weight	12.0 kg	23.0 kg	
Possible as base component	yes	yes	

Table 7- 6 Technical specifications of the sine-wave filters (table 2 of 3)

Feature	Suitable for Power Module with rated power (HO) of		
	15 kW … 18.5 kW	22 kW	30 kW … 37 kW
	FSD	FSD	FSE
MLFB of the sine-wave filter	6SL3202-0AE24-6SA0	6SL3202-0AE26-2SA0	6SL3202-0AE28-8SA0
MLFB of the suitable Power Module	6SL3225-0BE31-5 . A0 6SL3225-0BE31-8 . A0	6SL3225-0BE32-2 . A0	6SL3225-0BE33-0 . A0 6SL3225-0BE33-7 . A0
dv/dt limiting	≤ 500 V/µs	≤ 500 V/µs	≤ 500 V/µs
Power loss at 50 Hz	80 W	65 W	100 W
Motor connection	Screw terminals 25 … 50 mm²	Screw terminals 25 … 50 mm²	Screw terminals 25 … 95 mm²
Connection to Power Module	Screw terminals 25 … 50 mm²	Screw terminals 25 … 50 mm²	Screw terminals 25 … 95 mm²
Degree of protection	IP00 without terminal cover, IP20 with terminal cover	IP00 without terminal cover, IP20 with terminal cover	IP00 without terminal cover, IP20 with terminal cover
Overall dimensions Width Height Depth	 250 mm 305 mm 262 mm	 250 mm 315 mm 262 mm	 275 mm 368 mm 275 mm
Installation clearance Top Bottom Side	 100 mm - 100 mm	 100 mm - 100 mm	 100 mm - 100 mm
Fixing dimensions Width Depth	 230 mm 127 mm	 230 mm 127 mm	 250 mm 132 mm
Fixing screw	4 × M6	4 × M6	4 × M8
Weight	24 kg	34 kg	45 kg
Possible as base component	no	no	no

Table 7- 7 Technical specifications of the sine-wave filters (table 3 of 3)

Feature	Suitable for Power Module with rated power (HO) of		
	45 kW … 55 kW	75 kW	
	FSF	FSF	
MLFB of the sine-wave filter	6SL3202-0AE31-5SA0	6SL3202-0AE31-8SA0	
MLFB of the suitable Power Module	6SL3225-0BE34-5 . A0	6SL3225-0BE35-5 . A0	
dv/dt limiting	≤ 500 V/µs	≤ 500 V/µs	
Power loss at 50 Hz	180 W	190 W	
Motor connection	Screw terminals 50 … 150 mm²	Screw terminals 50 … 150 mm²	
Connection to Power Module	Screw terminals 50 … 150 mm²	Screw terminals 50 … 150 mm²	
Degree of protection	IP00 without terminal cover, IP20 with terminal cover	IP00 without terminal cover, IP20 with terminal cover	
Overall dimensions Width Height Depth	 350 mm 440 mm 305 mm	 350 mm 468 mm 305 mm	
Installation clearance Top Bottom Side	 100 mm - 100 mm	 100 mm - 100 mm	
Fixing dimensions Width Depth	 320 mm 255 mm	 320 mm 155 mm	
Fixing screw	4 × M8	4 × M8	
Weight	63 kg	80 kg	
Possible as base component	no	no	

7.2 Brake Relay

The Brake Relay is designed to provide the interface between the Power Module and the brake solenoid of a motor. There are two types of Brake Relays:

- Brake Relay – this provides the basic braking control function.
- Safe Brake Relay – this provides for the braking control function within a safety integrated system. To adhere to the requirements of a safety integrated system, the Safe Brake Relay has been designed to allow a variable voltage to be given to the Safe Brake Relay to allow the system to determine if the Safe Brake Relay is functioning correctly without actually activating the braking function.

Mounting the Brake Relay

The Brake Relay can be panel mounted, wall mounted or mounted on the shield connection kit.

For more information see http://support.automation.siemens.com/WW/view/de/23623179

Connecting the Brake Relay to the Power Module

Connect one end of the cable form to the Brake Relay.
Two cable form with different lengths are provided with the Brake Relay. Choice the adequate length of the cable depending on the frame size of the Power Module and on the mounting location of the Brake Relay.

Brake Relay	Safe Brake Relay
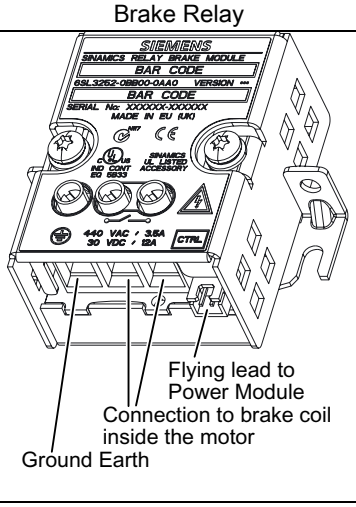	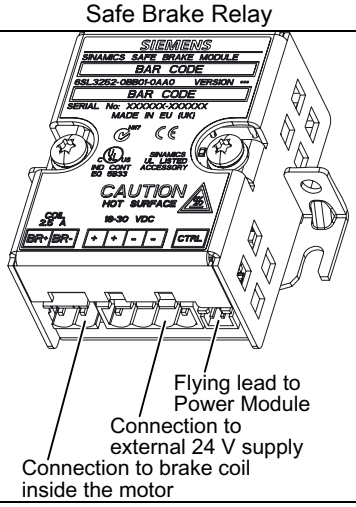
The Brake Relay control connector is marked as "CTRL"	

Connect the other end of the cable form to the Power Module

FSC 7.5 kW … 15 kW	FSD … FSF 18.5 kW … 90 kW
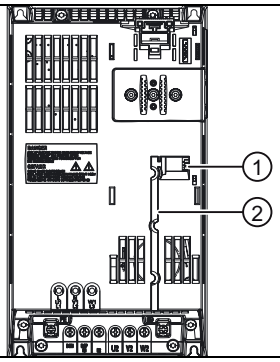	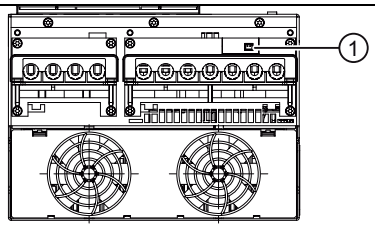
The Brake Relay control connector ① is on the front of the Power Module. The Power Module provides a cable duct ② for the control cable	The Brake Relay control connector ① is on the bottom of the Power Module

Connecting the Brake Relay to the motor brake

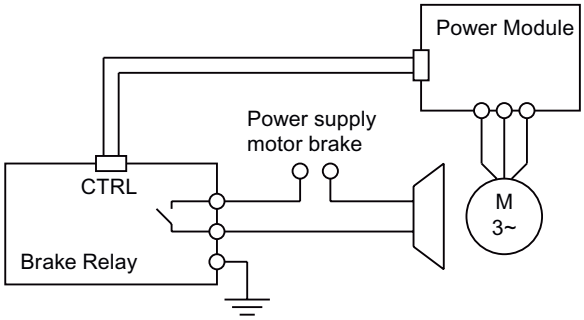

Figure 7-8 Brake Relay connection

The Brake Relay has to be connected to protective earth, if the motor brake is supplied by a PELV circuit.

Connecting the Safe Brake Relay to the motor brake

The Safe Brake Relay can only control motor brakes with 24V power supply.

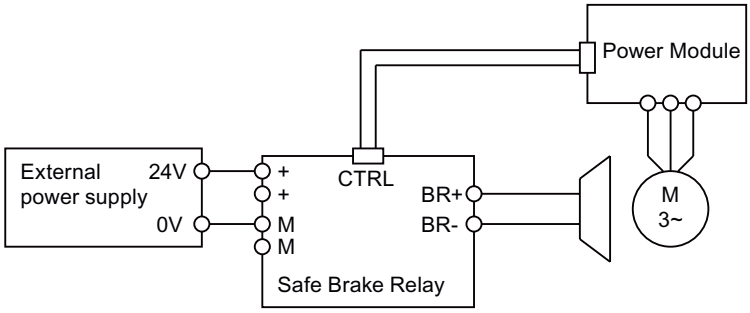

Figure 7-9 Safe Brake Relay connection

Brake Relay specifications

	Brake Relay	Safe Brake Relay
Input voltage	connected to the internal power supply of the Power Module	DC 20.4 ... 28.8 V 1)
Input current		Max. 2.5 A
Max. conductor cross-section	2.5 mm²	2.5 mm²
Degree of protection	IP20	IP20
Switching capacity of the NO contact	1 AC 440 V, 3.5 A 1 DC 30 V DC, 12 A	-
Output voltage	-	24 V
Output current	-	max. 2 A
1) External controlled power supply is necessary. Recommended voltage: DC 26 V		

7.3 Screen termination kit

Function of the screen termination kit

The screen termination kit has been designed to allow the termination of control, mains and power cables to ensure the correct electrical grounding to the inverter.

The screen termination kits provides for the termination of at least 4 screened cables.

Mounting the screen termination kit

The mounting description of the screen termination kit is available in the internet:
http://support.automation.siemens.com/WW/view/de/23621093

Appendix

A

A.1 Electromagnetic Compatibility

Electromagnetic compatibility

All manufacturers/assemblers of electrical apparatus which "performs a complete intrinsic function and is placed on the market as a single unit intended for the end user" must comply with the EMC directive EC/89/336.

There are three routes for the manufacturer/assembler to demonstrate compliance:

Self-certification

This is a manufacturer's declaration that the European standards applicable to the electrical environment for which the apparatus is intended have been met. Only standards that have been officially published in the Official Journal of the European Community can be cited in the manufacturer's declaration.

Technical construction file

A technical construction file can be prepared for the apparatus describing its EMC characteristics. This file must be approved by a ‘Competent Body’ appointed by the appropriate European government organization. This approach allows the use of standards that are still in preparation.

EMC Standards

The SINAMICS G120 drives have been tested in accordance with the EMC Product Standard EN 61800-3:2004.

A.2 Definition of the EMC Environment and Categories

Classification of EMC performance

The EMC environment and categories are defined within the EMC Product Standard EN 61800-3, as follows:

First Environment

An environment that includes domestic premises and establishments that are connected directly to a public low-voltage power supply network without the use of an intermediate transformer.

Note

For example: houses, apartments, commercial premises or offices in a residential building.

Second Environment

An environment that includes industrial premises and establishments that are not connected directly to a public low-voltage power supply network.

Note

For example: industrial and technical areas of buildings fed from a dedicated transformer.

Category C1

Power Drive System (PDS) of rated voltage less than 1000 V intended for use in the First (Domestic) Environment.

Category C2

Power Drive System (PDS) of rated voltage less than 1000 V, which is neither a plug in device nor a movable device, and when used in the First (Domestic) Environment, is only intended to be installed and commissioned by a professional.

Note

A professional is a person or an organization having necessary skills in installing and/or commissioning a Power Drive System (PDS), including their EMC aspects.

Category C3

Power Drive System (PDS) of rated voltage less than 1000 V intended for use in the Second (Industrial) Environment and not intended for use within the First (Domestic) Environment.

Table A- 1 Compliance Table

Model	Remarks
Category C1 - First Environment	
--	The inverters are not intended for use within the Category C1 Environment.
Category C2 - First Environment - Professional Use	
Filtered Variants	6SL3225-0BE**-*AA0 (integrated class A filter)
	25 m screened cable type CY
	When used in the First (Domestic) Environment this product may cause radio interference in which case mitigation measures may be required. Units installed within the Cateogry C2 (Domestic) Environment require supply authority acceptance for connection to the puplic low-voltage power supply network. Please contact your local supply network provider.
Category C3 - Second Environment	
Unfiltered Variants	----
	The use of unfiltered drives within an industrial installation is only possible if it forms part of a system which includes additional power-line filtering at the "system level" or, alternatively, the use of filtered variants.

Note

All drives should be installed and commissioned in accordance with the manufacturer’s guidelines and in accordance with good EMC practices.

For further information refer to SIEMENS application note "EMC Design Guidelines".

A.3 Standards

Standards

	European Low Voltage Directive The SINAMICS G120 product range complies with the requirements of the Low Voltage Directive 2006/95/EC. The units are certified for complaince with the following standards: EN 61800-5-1 — Semiconductor inverters –General requirements and line commutated inverters EN 60204-1 — Safety of machinery –Electrical equipment of machines
	European Machinery Directive The SINAMICS G120 inverter series does not fall under the scope of the Machinery Directive. However, the products have been fully evaluated for compliance with the essential Health & Safety requirements of the directive when used in a typical machine application. A Declaration of Incorporation is available on request.
	European EMC Directive When installed according to the recommendations described in this manual, the SINAMICS G120 fulfils all requirements of the EMC Directive as defined by the EMC Product Standard for Power Drive Systems EN 61800-3
	Underwriters Laboratories UL and CUL LISTED POWER CONVERSION EQUIPMENT for use in a pollution degree 2 environment. The UL certification for the Power Modules without integrated line filter was in progress at print date. The latest information regarding the Power Module is published under http://support.automation.siemens.com/WW/view/en/30563173/133400
SEMI F47	**Specification for Semiconductor Process Equipment Voltage Sag Immunity** The SINAMICS G120 Power Modules PM240 fulfill the requirements of the SEMI F47-0706 standard.
	ISO 9001 Siemens plc operates a quality management system, which complies with the requirements of ISO 9001.

Certificates can be downloaded from the internet under the following link:
http://support.automation.siemens.com/WW/view/en/22339653/134200

A.4 Abbreviations

Abbreviation	State
AC	Alternating Current
CE	Communauté Européenne
CU	Control Unit
DC	Direct current
DI	Digital input
DIP	DIP switch
DO	Digital output
ECD	Equivalent circuit diagram
EEC	European Economic Community
ELCB	Earth leakage circuit breaker
EMC	Electromagnetic compatibility
EMI	Electromagnetic interference
FSA	Frame size A
FSB	Frame size B
FSC	Frame size C
FSD	Frame size D
FSE	Frame size E
FSF	Frame size F
FSGX	Frame size GX
GSG	Getting Started Guide
HO	High Overload (Constant Torque)
I/O	In-/output
IGBT	Insulated gate bipolar transistor
LED	Light emitting diode
LO	Light Overload (Variable Torque)
NC	Normally closed
NEMA	National Electrical Manufacturers Association
NO	Normally open
OPI	Operating Instructions
PELV	Protection by extra low voltage
PM	Power Module
PPE	Personal protective equipment
RCCB	Residual current circuit breaker
RCD	Residual current device
RFI	Radio frequency interference
SELV	Safety extra low voltage
VT	Variable torque

Index

A

Access to power and motor terminals, 35
Air barrier, 19
Air cooling requirements, 20
Air flow, 19
Air short circuit, 19
Altitude, 47

B

Brake Relay, 66
    Technical specifications, 68

C

Cable lug, 37
Category C1, 72
Category C2, 72
Classification of EMC performance, 72
Cooling, 19
Current reduction, 46

D

Dimension Drawings, 21

E

Electrical installation, 14, 29
Electromagnetic compatibility, 71
Electromagnetic Interference (EMI), 38
EMC Standards, 71
European EMC Directive, 74
European Low Voltage Directive, 74
European Machinery Directive, 74

F

First Environment, 72
Fitting the Control Unit to the Power Module, 28

G

General rules for the environmental protection, 18

H

High Overload (HO) input currents, 48

I

Input Currents
    High Overload, 48
    Light Overload, 48
IP00 protection, 37
ISO 9001, 74
IT, 30

L

Leakage current, 29
Light Overload (HO) input currents, 48
Line filter
    Installing, 53
Lug
    ring-type, 37
    standard, 37

M

Maintenance
    Cleaning, 41
    Contamination, 41
    Dirt, 41
    Terminals, 41
    Ventilation, 41
Mechanical installation, 14

O

Operation with Residual Current Devices (RCD), 32
Operation with ungrounded supplies, 31
Output reactor
    Installing, 56

P

Personal protective equipment, 17
Power and motor terminal layout, 36
Power Distribution Systems, 30
Power Drive System (PDS), 72
Power losses, 19
Power Modules
  Dimension Drawings, 21
  Fitting the Control Unit to the, 28
  General rules for the environmental protection of, 18
  Overview, 8
  Performance ratings, 45
  Specifications, 48
PPE, 17
Pulse frequency, 46

S

Safe Brake Relay, 66
Safety notes
  Commissioning, 13
  Dismantling and disposal, 16
  Electrical installation, 14, 29
  General Warnings, Cautions and Notices, 12
  Mechanical installation, 14
  Operation, 15
  Repair, 16
  Safety Instructions, 11
  Transport and storage, 13
Screen termination kit, 69
Screening methods, 38
Screening without a Screen Termination Kit, 38
Second Environment, 72
Self certification, 71
Service life of the fan, 42
SINAMICS G120 range, 7
Sine-wave filter
  Installing, 61
Standards, 74
  EC/89/336, 71
  EN 60950, 30
  EN 61140, 30
  EN 61800-3, 72
  EN 61800-3:2004, 71

T

Technical construction file, 71
Technical specifications
  Brake Relay, 68
Temperature, 47
Temperature rise, 19
Terminals cover, 37
TN-C, 30
TN-C-S, 30
TN-S, 30
TT, 30

U

UL certified Fuses, 48
Underwriters Laboratories, 74

Siemens AG
Industry Sector
Drive Technologies
Standard Drives
Postfach 3180
91050 ERLANGEN
GERMANY

www.siemens.com/sinamics-g120

Subject to change without notice
© Siemens AG 2009